PLYMOUTH T WHARF

PLYMOUTH, MA

WHARF REPLACEMENT PROJECT-PHASE I

NOVEMBER 2014

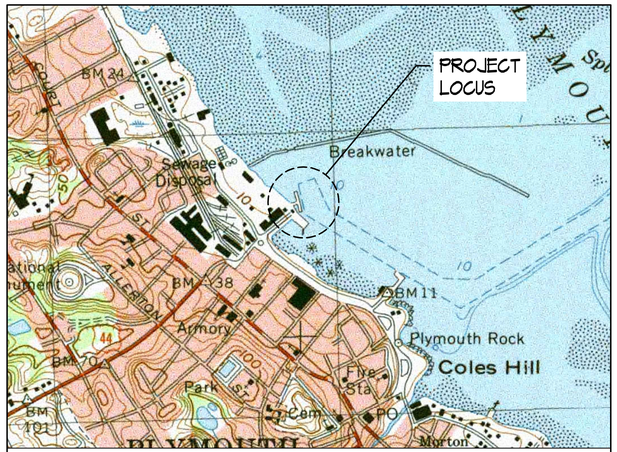

LOCUS PLAN

Project Owner:

Town of Plymouth

Department of Marine and Environmental Affairs

11 Lincoln St.

Plymouth, MA 02360

Design Team:

Bourne Consulting Engineering, PC- **Waterfront Engineers**

Franklin, MA

RDK Engineers **- Electrical Engineering**

Andover, MA

Bourne Consulting Engineering, PC

Waterfront Engineers

File: X:\34946-\34032 PLYMOUTH T WHARF PHASE 1\FINAL DESIGN\SHT-01 COVER SHEET.DWG

CODES:

AMERICAN SOCIETY FOR TESTING AND MATERIALS (ASTM)
AMERICAN WELDING SOCIETY (AWS)
AMERICAN INSTITUTE OF STEEL CONSTRUCTION (AISC)
AMERICAN INSTITUTE OF TIMBER CONSTRUCTION (AITC)
AMERICAN CONCRETE INSTITUTE (ACI)
CONCRETE REINFORCING STEEL INSTITUTE (CRSI)
MASSACHUSETTS STATE BUILDING CODE
THE COMMONWEALTH OF MASSACHUSETTS, DEPARTMENT OF PUBLIC WORKS "STANDARD SPECIFICATIONS FOR HIGHWAYS AND BRIDGES" (1988 EDITION, 15 JUNE 2012 SUPPLEMENTAL SPECIFICATIONS) (MHD), & 14 JUNE 2013 INTERIM SUPPLEMENTAL SPECIFICATIONS (MHD)

DESIGN CRITERIA – LIVE LOADS

PIER	DISTRIBUTED LIVE LOAD 175 PSF
	HS–20 TRUCK (16 TON AXLE)
BOARDWALK	LIVE LOAD 100 PSF
CRANE FOUNDATION	BASED ON MAX 4,000LB PICK AT 20' MAX RADIUS
	MAX OVERTURNING MOMENT 200,000 FT–LBS
VESSEL BERTHING	UP TO 60 FOOT
DESIGN WAVE HEIGHT	5.4 FEET

OSHA REQUIREMENTS:

PURSUANT TO M.G.L. c.30, §39S, ANY PERSON SIGNING A CONTRACT TO WORK ON A PUBLIC BUILDING OR PUBLIC WORKS PROJECT ESTIMATED TO COST MORE THAN $10,000, MUST CERTIFY UNDER THE PAINS AND PENALTIES OF PERJURY THAT ALL EMPLOYEES EMPLOYED ON THE WORKSITE, OR IN WORK SUBJECT TO THE BID, HAVE SUCCESSFULLY COMPLETED AT LEAST TEN HOURS OF OSHA APPROVED TRAINING. PROOF OF OSHA CERTIFICATION OF ALL WORKERS ONSITE WILL BE REQUIRED BY THE CITY PRIOR TO THE START OF WORK.

SURVEY CONTROL AND BASELINES:

1. TOPOGRAPHIC DATA LOCAL TO T–WHARF SHOWN HEREON WAS COLLECTED ON JANUARY 19, 2006 BY BOURNE CONSULTING ENGINEERING AND ONLY REFLECTS CONDITIONS AS THEY EXISTED DURING THE TIME OF THE SURVEY. ADDITIONAL TOPOGRAPHIC DATA PROVIDED BY TOWN OF PLYMOUTH.
2. COORDINATES ARE BASED ON MASSACHUSETTS (MAINLAND) STATE PLANE COORDINATE SYSTEM (NAD 83) AND ARE EXPRESSED IN FEET.
3. ELEVATIONS ARE SHOWN IN FEET AND TENTHS BASED ON MEAN LOW WATER (MLW) DATUM.
4. BENCHMARK "BM11" IS A 3 FOOT METAL ROD SET IN THE NORTHEAST PARKING ISLAND OF THE STATE BOAT RAMP PARKING LOT. IT IS SET AT EL. 8.93 NAVD88 AS PROVIDED BY THE TOWN OF PLYMOUTH, MA.
5. DATUM CONVERSION TO MLW IS BASED ON A CONVERSION OF +5.43 NAVD88 TO MLW AS PUBLISHED IN THE NOAA BENCHMARK DATA SHEETS FOR PLYMOUTH.
6. HYDROGRAPHIC SURVEY CONDUCTED BY OCEAN SURVEYS, INC., (OSI). THE INFORMATION PRESENTED REPRESENTS THE RESULTS OF A SURVEY PERFORMED ON JUNE 11–19, 1998.
7. THE LOCATIONS OF EXISTING UNDERGROUND UTILITIES ARE SHOWN IN AN APPROXIMATE WAY ONLY, BASED ON UTILITY COMPANY RECORDS AND LOCATION OF OBSERVABLE FEATURES. BCE MAKES NO WARRANTY OR GUARANTEE TO THE ACCURACY OF THE LOCATION OF UNDERGROUND UTILITIES.
8. SEE SHEET 4 FOR BORING INFORMATION. BCE MAKES NO WARRANTY OR GUARANTEE TO THE ACCURACY OF THE INFORMATION SHOWN.
9. EXISTING SURVEY CONTROL POINTS ARE PROVIDED AND SHOWN ON SHEET 3. THE CONTRACTOR SHALL INSTALL ADDITIONAL SURVEY CONTROL AS NECESSARY TO PERFORM THE WORK. PERMANENT SURVEY CONTROL (AT LEAST 2 POINTS) SHALL BE ESTABLISHED FOR THE PROJECT AND PROTECTED FROM DAMAGE DURING CONSTRUCTION AND PROVIDED ON AS–BUILT DRAWINGS.
10. THE CONTRACTOR SHALL ESTABLISH AND MAINTAIN PROJECT BASELINES AND CONTROL AS REQUIRED TO ENSURE ACCURATE LOCATION OF ALL ELEMENTS OF THE PROJECT.

SITE ACCESS AND STAGING AREAS:

1. CONTRACTOR STAGING AREA SHALL BE LOCATED WITHIN THE PROJECT LIMITS AS SHOWN ON SHEET 5.
2. CONTRACTOR TO MAINTAIN ACCESS TO TOWN PIER AT ALL TIMES. AREA SHALL BE KEPT CLEAR AT ALL TIMES UNLESS OTHERWISE SPECIFIED AND APPROVED BY THE ENGINEER.
3. NO MATERIALS OR EQUIPMENT SHALL BE STORED OUTSIDE LIMITS SHOWN UNLESS APPROVED BY ENGINEER.
4. THE CONTRACTOR SHALL BE SOLELY RESPONSIBLE FOR SITE SECURITY. CONTRACTOR SHALL PROVIDE CHAIN LINK FENCING AROUND PERIMETER OF WORK AREA AND STAGING AREA TO PREVENT PUBLIC ACCESS AND PROVIDE PUBLIC SAFETY. THE FENCE SHALL BE A MINIMUM OF 6'HIGH AND CONSTRUCTED OF GALVANIZED STEEL CHAIN LINK WITH POSTS AT 8' ON CENTER. FENCE SHALL BE SUPPORTED BY CONCRETE BLOCKS TO RECEIVE POSTS.
5. CONTRACTOR SHALL BE RESPONSIBLE FOR JOB SAFETY. ALL CONSTRUCTION ACTIVITY SHALL BE IN ACCORDANCE WITH OSHA STANDARDS AND LOCAL AND STATE REGULATIONS.
6. AREAS OUTSIDE THE LIMITS OF THE WORK DISTURBED OR DAMAGED BY THE CONTRACTOR SHALL BE RETURNED TO THEIR ORIGINAL CONDITION AT NO EXPENSE TO THE OWNER.
7. ALL EXISTING PAVEMENT DAMAGED WITHIN THE PROJECT LIMITS SHALL BE REPAIRED AT NO ADDITIONAL COST TO THE OWNER.
8. THE CONTRACTOR SHALL STAGE AND SEQUENCE CONSTRUCTION TO ENSURE STABILITY OF EXISTING STRUCTURES.

SITE PREPARATION:

1. CONTRACTOR SHALL INSTALL ALL SIGNAGE PRIOR TO INITIATION OF CONSTRUCTION ACTIVITIES INCLUDING OWNER PROJECT SIGNAGE, DEP FILE NUMBER AND FEDERAL AND STATE MANDATED WORK PLACE SIGNAGE.
2. CONTRACTOR SHALL HAVE IN–PLACE TRASH AND SANITARY FACILITIES FOR THE WORK PLACE.
3. EXISTING PAVEMENT, STRUCTURES AND AMENITIES WITHIN THE PROXIMITY OF THE WORK SHALL BE PROTECTED TO PREVENT ACCIDENTAL DAMAGE BY CONSTRUCTION ACTIVITIES.
4. DISCOVERY OF INCONSISTENT SITE INFORMATION OR CONDITIONS ARE TO BE IMMEDIATELY CONVEYED TO THE OWNER AND ENGINEER PRIOR TO COMMENCING OR CONTINUING CONSTRUCTION.
5. THE CONTRACTOR SHALL NOTIFY DIG–SAFE PRIOR TO COMMENCING ANY WORK ON SITE.
6. LOCATIONS OF EXISTING UNDERGROUND UTILITIES SHOWN ARE APPROXIMATE. THE CONTRACTOR SHALL VERIFY EXACT LOCATIONS OF UTILITIES AS MAY BE REQUIRED. THE CONTRACTOR SHALL BE FULLY RESPONSIBLE FOR ANY AND ALL DAMAGES OCCURRING AS A RESULT OF THE CONTRACTOR'S FAILURE TO LOCATE AND PROTECT UNDERGROUND UTILITIES. ALL REPAIRS SHALL BE MADE AT THE CONTRACTOR'S EXPENSE.
7. CONTRACTOR SHALL MAINTAIN AND PROTECT ALL EXISTING UTILITIES AND DRAINAGE AT ALL TIMES. THE CONTRACTOR SHALL REPAIR ANY DAMAGE AND RESTORE TO THE PRE–EXISTING CONDITION AT NO COST TO THE OWNER.
8. THE CONTRACTOR SHALL MAKE ALL ARRANGEMENTS AND BE RESPONSIBLE FOR PAYING ANY FEES OR COSTS FOR ANY POLE OR UTILITY ALTERATION OR RELOCATION.
9. CONTRACTOR SHALL SUPPLY AND INSTALL APPROVED FILTER FABRIC IN CATCH BASINS AND COVER AS REQUIRED TO PREVENT CONSTRUCTION RELATED FILL OR OTHER MATERIAL FALLING INTO CATCH BASIN.
10. CONTRACTOR SHALL CLEAN OUT ALL CATCH BASINS AND OTHER DRAINAGE STRUCTURES ON COMPLETION OF WORK.
11. CONTRACTOR SHALL SUPPLY ALL NECESSARY TEMPORARY UTILITIES FOR CONSTRUCTION INCLUDING WATER, POWER, LIGHTING, DATA AND TELEPHONE.
12. CONTRACTOR SHALL READ AND UNDERSTAND ALL REGULATORY CONDITIONS ASSOCIATED WITH THE PROJECT AND SHALL COMPLY WITH ALL ENVIRONMENTAL REQUIREMENTS AND PERMIT CONDITIONS.
13. CONTRACTOR SHALL CONFINE ALL OTHER TEMPORARY STOCKPILES OF EXCAVATED MATERIAL OR IMPORTED FILL USING HAY BALES AND FILTER FABRIC IN CONFORMANCE WITH PERMIT CONDITIONS.
14. CONTRACTOR SHALL PROVIDE A CONFINED CONCRETE TRUCK WASHDOWN AREA AT A LOCATION TO BE APPROVED BY THE ENGINEER. WASHDOWN AREA SHALL INCLUDE PROTECTION TO PAVEMENT, A PERIMETER WALL AND A FILTER FABRIC LINER. NO RUNOFF CONTAINING CEMENT OR OTHER SUSPENDED SOLIDS WILL BE PERMITTED. ALL MATERIALS SHALL BE COMPLETELY REMOVED ON COMPLETION OF CONSTRUCTION AND DISPOSED OF AT AN APPROVED DISPOSAL LOCATION.

EARTHWORK:

1. EARTHWORK MATERIALS TO MEET THE FOLLOWING STANDARDS:
   - GRANULAR BORROW/FILL MHD M1.01.0
   - GRAVEL BORROW TYPE B MHD M1.03.0
   - DENSE GRADED CRUSHED STONE FOR SUBBASE MHD M2.01.7
   - CRUSHED STONE MHD M2.01.0
   - UNDERLAYER STONE MHD M2.02.4
2. ORDINARY FILL BORROW SHALL BE EXISTING SUITABLE MATERIAL FOR REUSE WITH MAXIMUM 4" STONE.

CONCRETE:

1. ALL REINFORCEMENT SHALL BE NEW DEFORMED STEEL BARS, GRADE 60 CONFORMING TO ASTM A615, EPOXY–COATING CONFORMING TO ASTM A775/A775M.
2. REINFORCEMENT ACCESSORIES SHALL BE DIELECTRIC COATED STEEL OR APPROVED PLASTIC.
3. CONCRETE SHALL HAVE THE FOLLOWING SPECIFICATIONS:
   - MINIMUM COMPRESSIVE STRENGTH: 5,000 PSI AT 28 DAYS
   - AIR ENTRAINMENT SHALL BE MAINTAINED AT 4.5% – 7.5%
   - MAXIMUM SIZE OF AGGREGATE SHALL BE ¾ INCH.
   - WATER TO CEMENT RATIO SHALL BE 0.40 UNLESS OTHERWISE NOTED.
   - CEMENT SHALL MEET ASTM C150, TYPE II
   - MIN. CEMENT PER CY SHALL BE 660LBS
4. GROUT SHALL BE A HIGH STRENGTH, NON–SHRINK GROUT WITH SALTWATER RESISTANCE, SUCH AS FIVE STAR SPECIAL GROUT 120 OR EQUIVALENT.

HEAVY TIMBER:

1. UNLESS OTHERWISE SPECIFIED, ALL TIMBER TO BE USED SHALL BE NO. 2 SOUTHERN PINE AS GRADED BY SPIB AND WITH DESIGN VALUES PER NFPA NATIONAL DESIGN SPECIFICATION OR THE EQUIVALENT FOR DOUGLAS FIR AS GRADED BY WCLIB AND WWPA.
2. ALL TIMBER SHALL BE NEW AND SUPPLIED WITH NOMINAL DIMENSIONS UNLESS OTHERWISE NOTED. TIMBER SHALL BE FINISHED S4S UNLESS NOTED OTHERWISE.
3. ALL NEW TIMBER MEMBERS TO WHICH THE PUBLIC MAY BE EXPOSED SHALL BE TREATED WITH ALKALINE COPPER QUATERNARY (ACQ) IN ACCORDANCE WITH AWPA STANDARDS TO A RETENTION OF 0.6 LBS/CU.FT OR EQUAL APPROVED.
4. MISC. HARDWARE: GALVANIZED STEEL PLATES AND ALL BOLTS AND RELATED HARDWARE SHALL BE FASHIONED FROM STEEL AND GALVANIZED AFTER FABRICATION AND IN ACCORDANCE WITH REQUIREMENTS OF ASTM A123, AND/OR A153. ALL BOLTS FOR TIMBER CONNECTIONS SHALL CONFORM TO ASTM A307 OR EQUAL APPROVED.

TIMBER PILES:

1. UNLESS OTHERWISE SPECIFIED, ALL SOUTH PIER PILES SHALL BE TROPICAL GREENHEART IN CONFORMANCE WITH ASTM D25. BEARING PILE TIP CIRCUMFERENCE SHALL BE 30" OR GREATER.
2. ALL BOARDWALK PILES SHALL BE TREATED SOUTHERN PINE OR DOUGLAS FIR IN CONFORMANCE WITH ASTM D25.
3. PILES SHALL BE INSTALLED TO THE CRITERIA SHOWN IN THE CONTRACT DOCUMENTS AND DRAWINGS.

ALUMINUM:

1. ALUMINUM SHAPES SHALL MEET THE SPECIFICATIONS OF ALUMINUM ALLOY 6061–T6.
2. ALL NUTS, BOLTS AND WASHERS SHALL BE STAINLESS STEEL MEETING ASTM F593 TYPE 316 ALLOY. NUTS SHALL BE SELF LOCKING.
3. GANGWAY CONNECTION PINS AND SLEEVES SHALL BE STAINLESS STEEL CONFORMING TO ASTM A269 TYPE 316 ALLOY.
4. THE DECKING SHALL BE NON–SKID WITH EITHER A RAISED RIB PROFILE WITH THE RIBS NO HIGHER THAN 1/4" AND PERPENDICULAR TO THE FLOW OF TRAFFIC, OR COVERED WITH A UNIFORM CARBORUNDUM SURFACE. SURFACES SHALL HAVE A STATIC COEFFICIENT OF FRICTION OF 0.5 OR GREATER WHEN WET.

LIST OF DRAWINGS:

1 Cover Sheet
2 Drawing List, Legend, Abbreviations & General Notes
3 Existing Conditions Plan
4 Boring Logs
5 Site Preparation
6 Demolition Plan
7 Existing Sections
8 Site Layout / Pier Sections
9 Pile Plan & Details
10 Pile Cap Layout Plan & Details
11 Deck Concrete Details
12 Precast Concrete Deck Layout & Details
13 Fender System/Wave Fence Plan
14 Timber Details
15 Deck Fixture Layout Plan
16 Pier Utility Plan
17 Drainage Details-1
18 Drainage & Water Details-2
19 Boardwalk Plans & Sections
20 Boardwalk Details
21 Electrical- Legend, Notes, & Abbreviations
22 Electrical- Site Plan
23 Electrical- Details
24 Electrical- Details
25 Electrical - Demolition Site Plan
26 Pile Plan/Details - Historic Drawing
27 Stringer Plan/Details-Historic Drawing

LEGEND

	CATCH BASIN
D	DRAIN MANHOLE
E	ELECTRIC MANHOLE
S	SEWER MANHOLE
T	TELEPHONE MANHOLE
	HYDRANT
	LIGHT POLE
UP	UTILITY POLE
WV	WATER VALVE
	LADDER
	BOLLARD
	BUILDING
GP	GATE POST
MP	METAL POST
S	SIGN POST
GG	GAS GATE
GV	GAS VALVE
12"	DECIDUOUS TREE WITH TRUNK DIAMETER
12"	CONIFEROUS TREE WITH TRUNK DIAMETER
R=	RIM ELEVATION EQUALS
I=	INVERT ELEVATION EQUALS
N.P.V.	NO PIPE'S VISIBLE
T.O.D.=	TOP OF DIRT ELEVATION EQUALS
T.O.W.=	TOP OF WATER ELEVATION EQUALS
B.C.=	BOTTOM OF CHANNEL ELEVATION EQUALS
WDF	WOOD FENCE
L.S.	LANDSCAPED AREA
BIT.	BITUMINOUS
CONC.	CONCRETE
	SOIL BORING
14.53TW	TOP OF WALL ELEVATION
X 14.81	SPOT GRADE ELEVATION
MLW	MEAN LOW WATER
D	UNDERGROUND DRAIN LINE
E	UNDERGROUND ELECTRIC LINE
G	UNDERGROUND GAS LINE
S	UNDERGROUND SEWER LINE
T	UNDERGROUND TELEPHONE LINE
W	UNDERGROUND WATER LINE
OHW	OVERHEAD WIRES
A	CONTROL POINT
	PROPERTY LINE
	FENCE
	OVERHEAD WIRE
	GUARD RAIL
W	MONITORING WELL

COMMONWEALTH OF MASSACHUSETTS
RUSSELL J. TIMUSS
STRUCTURAL
No. 45514
REGISTERED PROFESSIONAL ENGINEER
R. J. Timuss
11/26/14

DATUM AND TIDE TABLE	
100 YEAR FLOOD	+16.57
HTL	+11.70
MHW	+9.75
NAVD88	+5.43
NGVD 29	+4.57
MLW	0.0

DRAWING LIST, LEGEND, ABBREVIATIONS & GENERAL NOTES

WHARF REPLACEMENT
PROJECT–PHASE I
TOWN OF PLYMOUTH
PLYMOUTH, MA
NOVEMBER 2014

REVISIONS

BCE Bourne Consulting Engineering, PC
3 Bent Street
Franklin, MA 02038
TEL. (508) 533-6666 FAX. (508) 533-0600

DRAWN: JSF
CHECKED: RJT
APPROVED: RJT
DATE: 11/26/14

DRAWING NO. 34032-01-02
SHEET 2 OF 27

File: X:\34946-\34032 PLYMOUTH T WHARF PHASE I\FINAL DESIGN\SHT-02 GEN NOTES.DWG - 11/12/2012 1:02 PM

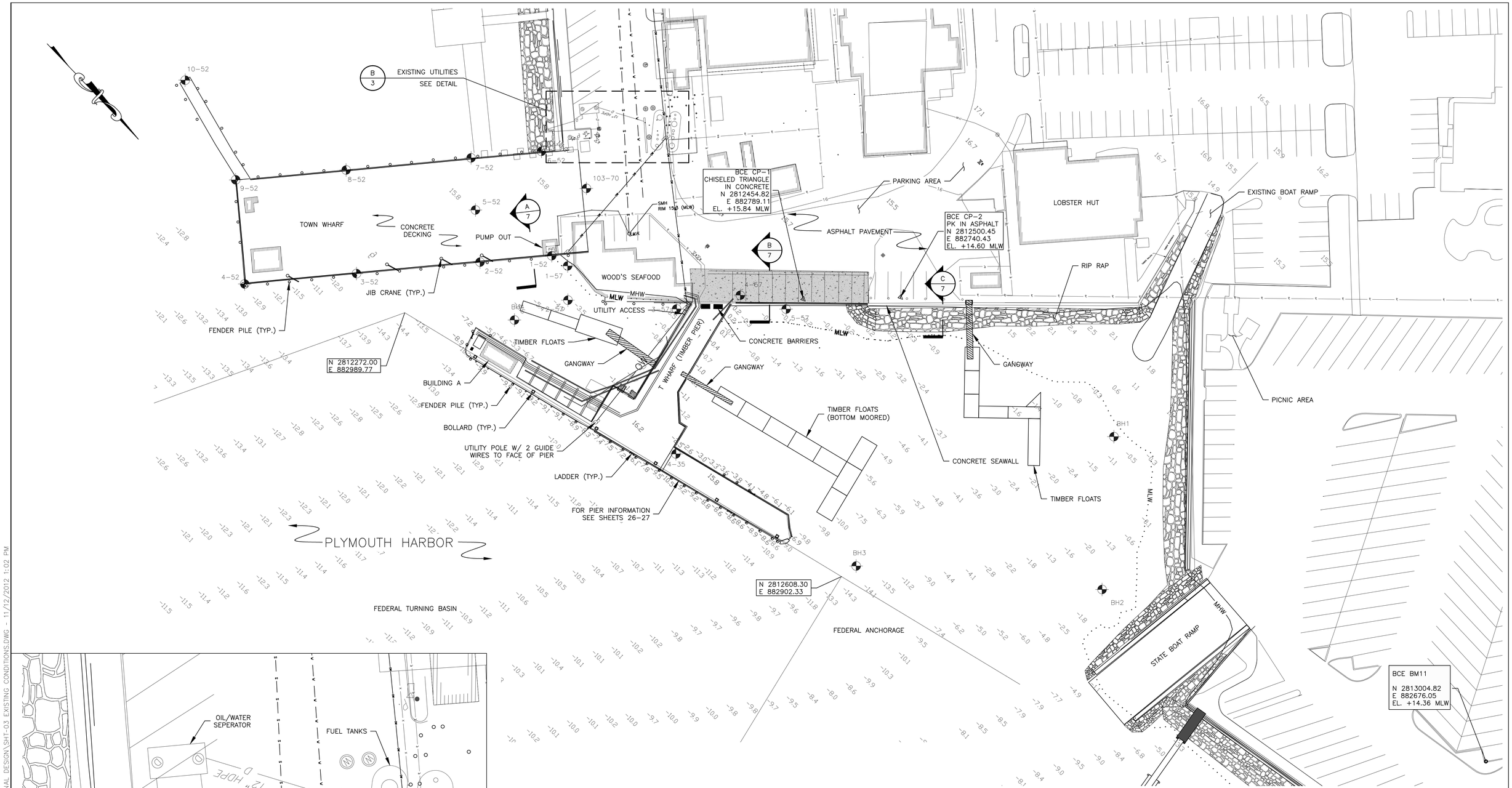

A/3 EXISTING CONDITIONS–PLAN

SCALE: 1"=30'-0"

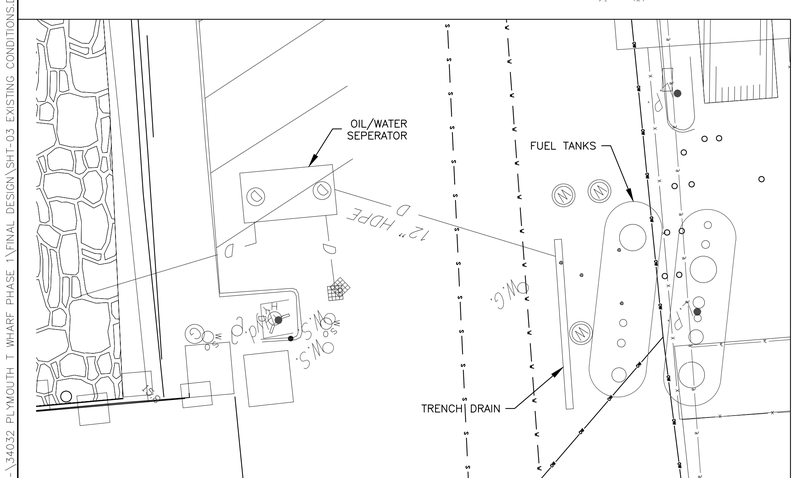

B/3 EXISTING UTILITIES–PLAN

SCALE: 1"=10'-0"

NOTES:
1. SEE SHEET 2 FOR GENERAL NOTES & LEGEND

COMMONWEALTH OF MASSACHUSETTS
RUSSELL J. TITMUSS
STRUCTURAL
No. 46514
REGISTERED PROFESSIONAL ENGINEER

R. J. Titmuss
11/26/14

DATUM AND TIDE TABLE	
100 YEAR FLOOD	+17.43
HTL	+11.70
MHW	+9.75
NAVD88	+5.43
NGVD 29	+4.57
MLW	0.0

0 30 60
SCALE: 1" = 30'

EXISTING CONDITIONS PLAN

WHARF REPLACEMENT PROJECT–PHASE I

TOWN OF PLYMOUTH
PLYMOUTH, MA
NOVEMBER 2014

REVISIONS

BCE
Bourne Consulting Engineering, PC
3 Bent Street
Franklin, MA 02038
TEL. (508) 533-6666 FAX. (508) 533-0600

DRAWN: JSF
CHECKED: RJT
APPROVED: RJT
DATE: 11/26/14

DRAWING NO. 34032-01-03
SHEET 3 OF 27

File: X:\34946-\34032 PLYMOUTH T WHARF PHASE 1\FINAL DESIGN\SHT-03 EXISTING CONDITIONS.DWG - 11/12/2012 1:02 PM

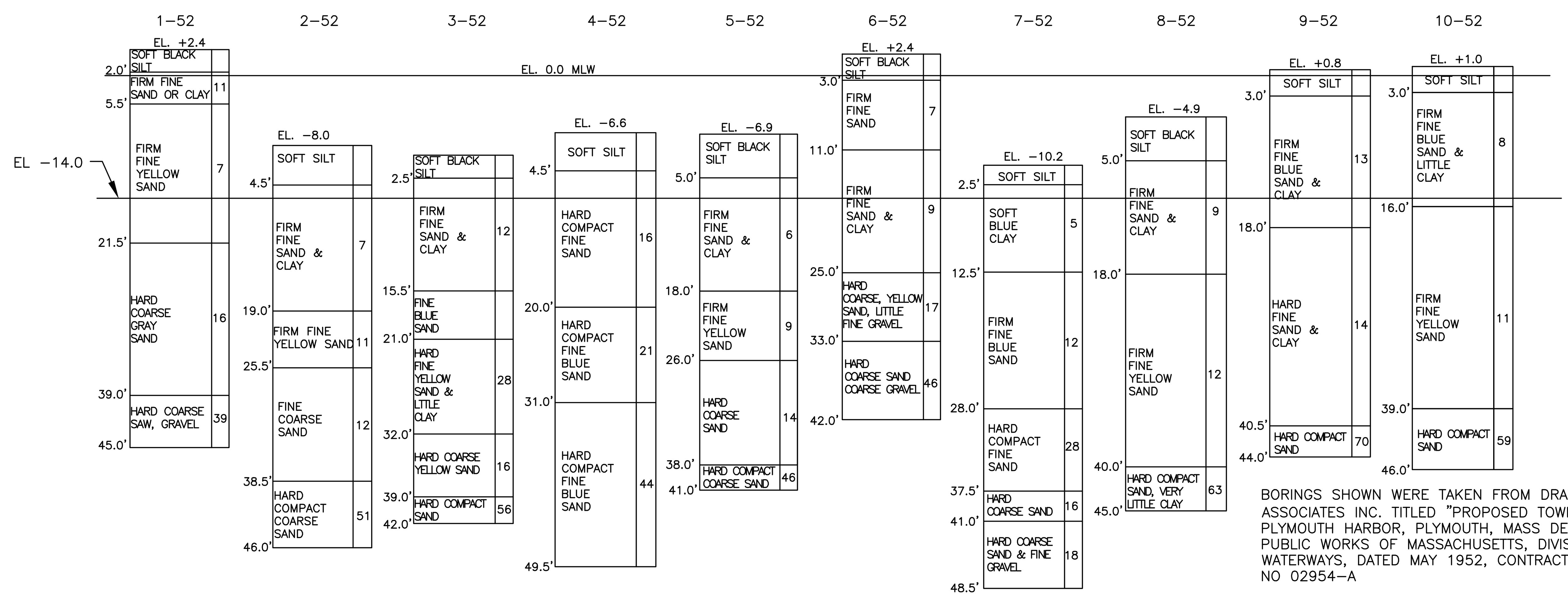

BORINGS SHOWN WERE TAKEN FROM DRAWING BY DUFFILL ASSOCIATES INC. TITLED "PROPOSED TOWN PIER PLYMOUTH HARBOR, PLYMOUTH, MASS DEPARTMENT OF PUBLIC WORKS OF MASSACHUSETTS, DIVISION OF WATERWAYS, DATED MAY 1952, CONTRACT NO. 1225 ACC. NO 02954–A

ELEVATIONS OF BORING LOGS ARE IN FEET AND TENTHS ABOVE THE PLANE OF MEAN LOW WATER.

MINUS ELEVATIONS SHOW DEPTHS BELOW PLANE OF MEAN LOW WATER.

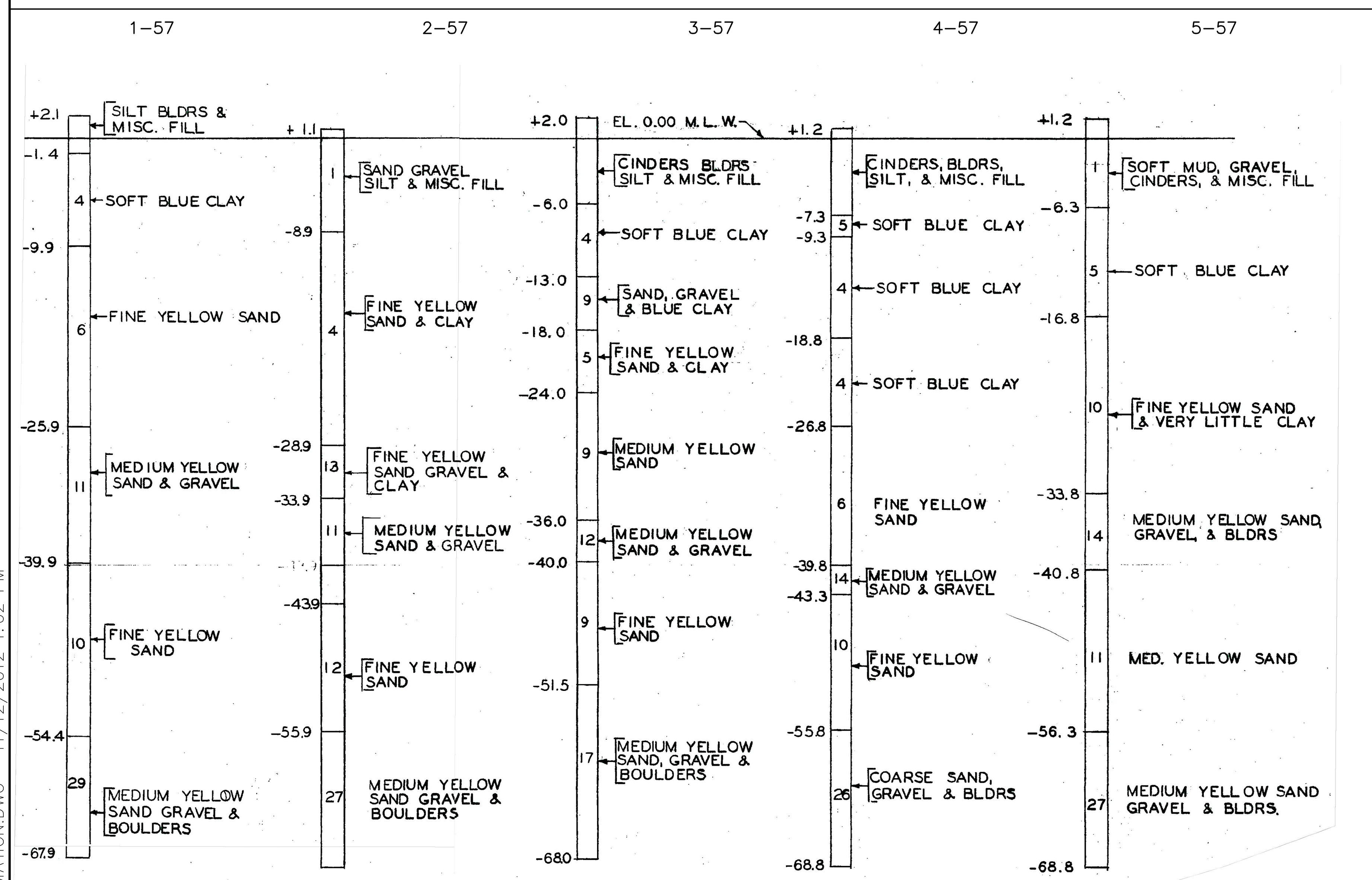

BORINGS SHOWN WERE TAKEN FROM DRAWINGS BY DUFFILL ASSOCIATES INC. TITLED "PROPOSED TOWN WHARF CONSTRUCTION, PLYMOUTH, DEPARTMENT OF PUBLIC WORKS OF MASSACHUSETTS, DIVISION OF WATERWAYS, DATED JANUARY 1959, CONTRACT NO. 1912 ACC. NO. 03864–F."

ELEVATIONS OF BORING LOGS ARE IN FEET AND TENTHS ABOVE THE PLANE OF MEAN LOW WATER.

MINUS ELEVATIONS SHOW DEPTHS BELOW PLANE OF MEAN LOW WATER

FIGURES IN BORING LOGS INDICATE NUMBER OF BLOWS TO DRIVE ONE INCH SAMPLING PIPE ONE FOOT, USING A 140 LB. WEIGHT FALLING THRITY INCHES.

BORINGS TAKEN OCT 18, 1957 BY CARR CONSTRUCTION CO. BOSTON, MA

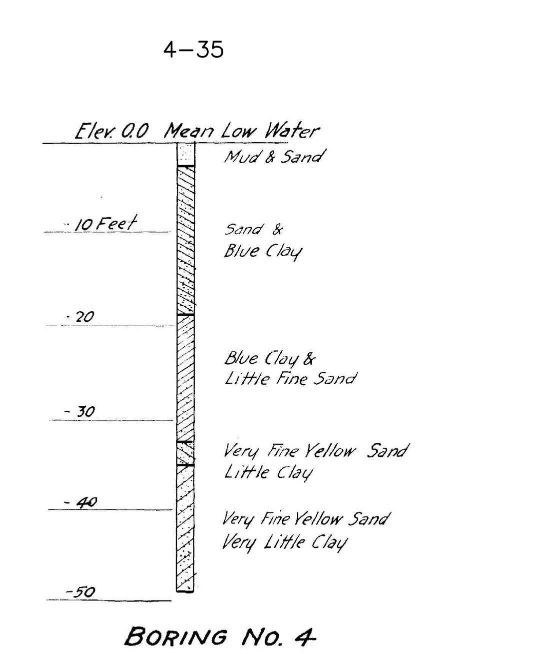

B-103-70

Boring Report

Fay Spofford & Thorndike, 11 Beacon Street, Boston, Massachusetts

NORTHEAST TEST BORING CO. INC., 150 ESSEX STREET, WEYMOUTH, MASS.

Town: Plymouth, Massachusetts — Project Name: Bulkhead at Town Wharf Road — Project No.: 2695

Sheet 1 of 3 — Location: Land — Hole No.: B-103 — Line & Sta.: 13+17 — Offset: 12' Lt.

Ground water observations: Tidal

Casing: Steel, size I.D. 2½", hammer wt. 400, hammer fall 24" — Sampler: SS, 1 3/8", 140, 30"

Surface Elev.: 15.97 — Date Finish: 7-17-70 — Boring Foreman: P. Manning — Inspector: D. Woodhouse

Casing blows per foot: 36, 25, 12, 14, 15, 12, 8, 10, 10, 9, 10, 10, 28, 15, 20, 21, 28, 24, 16, 12, 31, 40, 35, 30, 31, 34, 32, 35, 30, 28, 25, 28, 30, 32, 34, 35, 40, 20, 28, 40, 36, 32, 28, 32, 45, 40, 35, 20, 30, 45, 40, 50, 30, 35, 38, 40, 43, 34, 39, 43, 48, 59, 90, 58, 60, 65, 80, 118, 140, 145, 130, 153, 130, 142, 146, 149, 145, 145

Sample No.	Sample Depths From-To	Type of Sample	0-6	6-12	12-18	Remarks
1	2-3.5'	SS	8	7	12	
2	5-6.5'	SS	4	5	5	(2 jars)
3	10-11.5'	SS	2	1	2	(2 jars)
4	15-16.5'	SS	20	15	8	(2 jars)
5	20-21.5'	SS	7	7	12	
6	25-26.5'	SS	9	10	12	
7	30-31.5'	SS	8	9	9	
8	35.5'-37'	SS	8	8	9	
9	40-41.5'	SS	8	8	28	
10	45-46.5'	SS	11	14	16	
11	50-51.5'	SS	11	12	12	
12	55-56.5'	SS	2	2	1	(Casing blows indicate S-12 was disturbed)
13	60-61.5'	SS	8	9	9	
14	65-66.5'	SS	9	10	10	
15	68-69.5'		20	50	55	
15A	69.5-70'		13			
16	75'-	SS	25	23	28	50 blows 0"; 400#H
16A	76.5'					
17	80-80.5'	SS	120			

Strata Change Depth	Field Identification of Soil
0.25'	Pavement
15.0'	Medium to very loose mixed Fill
15.5'	Sand, Gravel & Muck
16.0'	Compact to medium gray Sand & Silt some Gravel & Clay
25.0'	Very stiff gray Clay some Silt trace of fine Gravel
35.5'	Moist brown Silt & Sand trace of Clay
40.0'	Medium brown Silt some fine Sand
44.0'	Wet, medium brown Silt - some fine Sand
68.5'	Wet medium fine brown Sand trace of Silt (running Sand)
69.5'	See Note 1
70.0'	Medium fine brown Sand
76.0'	Very compact fine brown Sand & Gravel some Cobbles
76.5'	Medium fine brown Sand
80.0'	Very compact fine brown Sand & Gravel some Cobbles
80.5'	Broken Rock
	Bottom of hole 80.5' Refusal 30 blows 400# H no penetration.

Note 1 Very compact brown Sand & Gravel.

D = DRY W = WASHED C = CORED P = PIT A = AUGER UP = UNDISTURBED, PISTON UB = UNDISTURBED, BALL CHECK V = VANE TEST Rev. 9/21/70

Proportions used: trace = 0-10%, little = 10-20%, some = 20-35%, and = 35-50% — Hole No. B-103

BORINGS SHOWN WERE TAKEN FROM DRAWING BY FAY, SPOFFARD, & THORNDIKE, INC. TITLED "PROPOSED HARBOR IMPROVEMENTS REPAIRS TO BULKHEAD PLYMOUTH HARBOR, PLYMOUTH, DEPARTMENT OF PUBLIC WORKS OF MASSACHUSETTS, DIVISION OF WATERWAYS, DATED FEBRUARY 1971, CONTRACT NO 2725 ACC. NO 04868–E

ELEVATIONS OF BORING LOGS ARE IN FEET AND TENTHS ABOVE THE PLANE OF MEAN LOW WATER.

MINUS ELEVATIONS SHOW DEPTHS BELOW PLANE OF MEAN LOW WATER.

FIGURES IN BORING LOGS INDICATE NUMBER OF BLOWS TO DRIVE ONE INCH SAMPLING PIPE ONE FOOT, USING A 140 LB. WEIGHT FALLING THIRTY INCHES.

BH-1

MAINE TEST BORINGS, INC. BREWER, MAINE 04412 — Client: Bourne Consulting Engineers — Sheet — Hole No. BH-1

Driller: Brad Enos — Project Name: T-Wharf Soil Borings & Probes — Line & Station

M.T.B. Job Number: 07-225 — Location: Plymouth, MA — Offset

Ground Water Observations — Casing: Type NW, Size I.D. 3", Hammer Wt. 300#, Hammer Fall 16" — Sampler: SS, 1 3/8", 140#, 30" — Core Barrel — Date 10/31/2007 Start — Date 11/1/2007 Finish — Surface Elevation

Casing Blows per Foot	No.	O.D.	Pen.	Rec.	Depth @ Bot.	0-6	6-12	12-18	18-24
4									
6	1D	2"	24"		2.0	3	6	5	1
3									
2									
2									
4									
2	2D	2"	24"		7.0	3	1	WOH	1
3									
3									
3									
3									
8	3D	2"	24"		12.0	WOR	3	4	5
15									
13									
12									
15									
14	4D	2"	24"		17.0	2	WOH	WOH	WOH
14									
19									
19									
19									
19	5D	2"	24"		22.0	1	2	3	2
20									
20									
18									
20									
22	6D	2"	24"		27.0	7	5	5	5
18									
17									
22									
31									
25	7D	2"	24"		32.0	WOR	WOR	1	3
24									
42									
58									
13									
24	8D	2"	24"		37.0	WOR	3	10	14
30									
34	9D	2"	24"		42.0	2	7	12	36
43									
73									
94									
54									
50	10D	2"	24"		47.0	WOR	WOR	WOR	WOR
66									
106									
	11D	2"	24"		51.0	WOR	WOR	WOR	WOR

Depth	Stratum Description
13.5	Black & Brown Organic Silt & Sand
24.0	Gray Silt & Sand w/Trace of Gravel
	Brown Silty Sand w/Gravel
51.0	Brown Silty Sand w/Gravel
	Bottom of Boring @ 51.0'

BH-2

MAINE TEST BORINGS, INC. BREWER, MAINE 04412 — Client: Bourne Consulting Engineers — Sheet — Hole No. BH-2

Driller: Brad Enos — Project Name: T-Wharf Soil Borings & Probes — Line & Station

M.T.B. Job Number: 07-225 — Location: Plymouth, MA — Offset

Ground Water Observations — Casing: Type NW, Size I.D. 3", Hammer Wt. 300#, Hammer Fall 16" — Sampler: SS, 1 3/8", 140#, 30" — Core Barrel — Date 10/30/2007 Start — Date 10/31/2007 Finish — Surface Elevation

Casing Blows per Foot	No.	O.D.	Pen.	Rec.	Depth @ Bot.	0-6	6-12	12-18	18-24
WOC									
WOH	1D	2"	24"		2.0	WOR	WOR	WOR	WOH
WOC									
WOC									
WOH									
WOH									
WOH	2D	2"	24"		7.0	WOR	WOR	WOR	WOH
WOH									
WOH									
WOH									
WOH									
WOH	3D	2"	24"		12.0	WOR	WOR	WOR	WOR
1									
4									
4									
9									
9	4D	2"	24"		17.0	WOR	WOR	1	5
15									
24									
40									
41									
54	5D	2"	24"		22.0	11	11	14	17
60									
64									
53									
61									
57	6D	2"	24"		27.0	4	8	10	12
53									
43									
37									
40									
40	7D	2"	24"		32.0	WOR	2	3	6
38									
39									
53									
58									
66	8D	2"	24"		37.0	5	10	19	26
97									
120									
121									
	9D	2"	18"		41.5	14	23	75	

Depth	Stratum Description
10.5	Black Sandy Organic Silt w/Wood
12.5	Gray Sandy Clayey Silt
14.0	Black Organic Sandy Silt
18.5	Olive Brown Sandy Clay & Silt
23.5	Olive Brown Gravelly Sandy Silt
33.5	Brown Silt & Sand
38.0	Brown Silty Gravelly Sand
	Brown Silty Sand w/Trace of Gravel
41.5	Brown Silty Sand w/Trace of Gravel
	Bottom of Boring @ 41.5'

BH-3

MAINE TEST BORINGS, INC. BREWER, MAINE 04412 — Client: Bourne Consulting Engineers — Sheet — Hole No. BH-3

Driller: Brad Enos — Project Name: T-Wharf Soil Borings & Probes — Line & Station

M.T.B. Job Number: 07-225 — Location: Plymouth, MA — Offset

Ground Water Observations — Casing: Type NW, Size I.D. 3", Hammer Wt. 300#, Hammer Fall 16" — Sampler: SS, 1 3/8", 140#, 30" — Core Barrel — Date 10/31/2007 Start — Date 10/31/2007 Finish — Surface Elevation

Casing Blows per Foot	No.	O.D.	Pen.	Rec.	Depth @ Bot.	0-6	6-12	12-18	18-24
WOC									
WOC	1D	2"	24"		2.0	WOR	WOR	WOR	WOR
WOC									
WOC									
WOC									
WOC									
WOC	2D	2"	24"		7.0	WOR	WOR	WOR	WOR
WOC									
WOH									
10									
8									
13	3D	2"	24"		12.0	4	7	7	9
23									
26									
31									
4									
14	4D	2"	24"		17.0	WOR	6	8	8
27									
25									
31									
24									
32	5D	2"	24"		22.0	11	9	8	11
30									
27									
33									
28									
35	6D	2"	24"		27.0	19	10	9	7
45									
47									
67									
30									
35	7D	2"	24"		32.0	3	3	4	15
45									
42									
66									
5									
13	8D	2"	24"		37.0	1	4	14	21
18									
28									
42									
	9D	2"	24"	16"	41.3	7	25	50	

Depth	Stratum Description
8.2	Black Sandy Organic Silt
9.5	Gray Sandy Clayey Silt
17.5	Olive Brown Silty Sand
	Brown Silty Sand
41.3	Brown Silty Sand
	Bottom of Boring @ 40.3'

BH-4

MAINE TEST BORINGS, INC. BREWER, MAINE 04412 — Client: Bourne Consulting Engineers — Sheet — Hole No. BH-4

Driller: Brad Enos — Project Name: T-Wharf Soil Borings & Probes — Line & Station

M.T.B. Job Number: 07-225 — Location: Plymouth, MA — Offset

Ground Water Observations — Casing: Type NW, Size I.D. 3", Hammer Wt. 300#, Hammer Fall 16" — Sampler: SS, 1 3/8", 140#, 30" — Core Barrel — Date 11/3/2007 Start — Date 11/3/2007 Finish — Surface Elevation

Casing Blows per Foot	No.	O.D.	Pen.	Rec.	Depth @ Bot.	0-6	6-12	12-18	18-24
WOC									
WOC	1D	2"	24"		2.0	WOR	WOR	WOR	WOR
WOC									
WOH									
WOH									
20									
21	2D	2"	24"		7.0	WOR	8	17	9
20									
17									
17									
1									
8	3D	2"	24"		12.0	3	5	7	6
19									
19									
25									
21									
24	4D	2"	24"		17.0	8	7	9	9
24									
21									
28									
20									
21	5D	2"	24"		22.0	5	3	3	4
24									
29									
50									
54									
55	6D	2"	24"		27.0	19	19	12	16
58									
59									
89									
41									
73	7D	2"	24"		32.0	40	20	19	20
86									
198									
200									
61									
75	8D	2"	24"		37.0	29	11	8	11
96									
109									
105									
	9D	2"	24"		42.0	WOR	WOR	4	11

Depth	Stratum Description
5.5	Black Organic Sandy Silt
	Brown Silty Sand w/Trace of Gravel
42.0	Brown Silty Sand w/Trace of Gravel
	Bottom of Boring @ 42.0'

BORING LOGS

WHARF REPLACEMENT PROJECT–PHASE I

TOWN OF PLYMOUTH
PLYMOUTH, MA
NOVEMBER 2014

RUSSELL J. TITMUSS STRUCTURAL No. 46514 REGISTERED PROFESSIONAL ENGINEER — COMMONWEALTH OF MASSACHUSETTS

R. J. Titmuss 11/26/14

REVISIONS

BCE Bourne Consulting Engineering, PC
3 Bent Street
Franklin, MA 02038
TEL. (508) 533-6666 FAX. (508) 533-0600

DRAWN: JSF
CHECKED: RJT
APPROVED: RJT
DATE: 11/26/14

DRAWING NO. 34032-01-04

SHEET 4 OF 27

File: X:\34946-\34032 PLYMOUTH T WHARF PHASE 1\FINAL DESIGN\SHT-04 BORING INFORMATION.DWG - 11/12/2012 1:02 PM

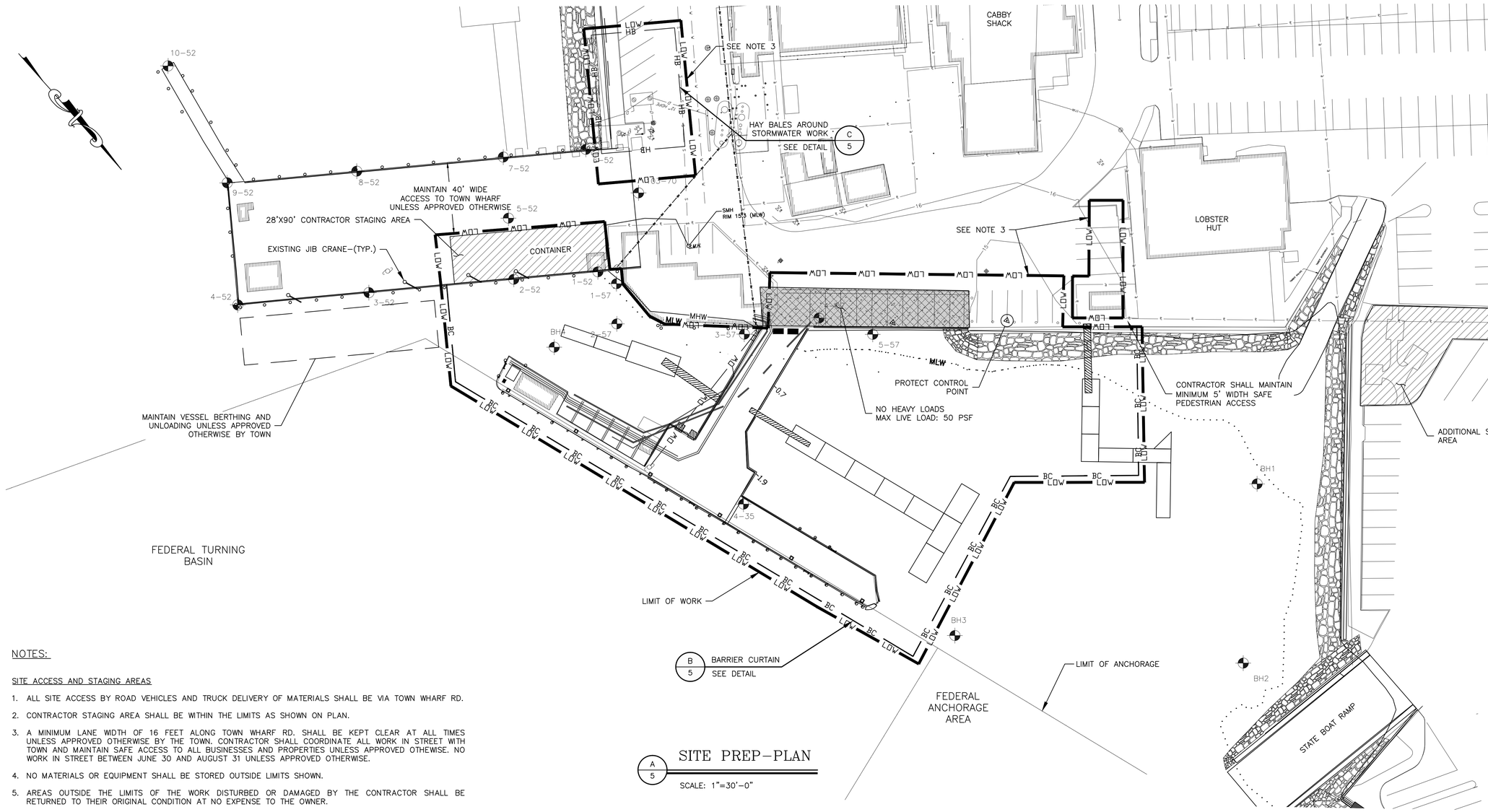

A 5 SITE PREP-PLAN

SCALE: 1"=30'-0"

NOTES:

SITE ACCESS AND STAGING AREAS

1. ALL SITE ACCESS BY ROAD VEHICLES AND TRUCK DELIVERY OF MATERIALS SHALL BE VIA TOWN WHARF RD.
2. CONTRACTOR STAGING AREA SHALL BE WITHIN THE LIMITS AS SHOWN ON PLAN.
3. A MINIMUM LANE WIDTH OF 16 FEET ALONG TOWN WHARF RD. SHALL BE KEPT CLEAR AT ALL TIMES UNLESS APPROVED OTHERWISE BY THE TOWN. CONTRACTOR SHALL COORDINATE ALL WORK IN STREET WITH TOWN AND MAINTAIN SAFE ACCESS TO ALL BUSINESSES AND PROPERTIES UNLESS APPROVED OTHEWISE. NO WORK IN STREET BETWEEN JUNE 30 AND AUGUST 31 UNLESS APPROVED OTHERWISE.
4. NO MATERIALS OR EQUIPMENT SHALL BE STORED OUTSIDE LIMITS SHOWN.
5. AREAS OUTSIDE THE LIMITS OF THE WORK DISTURBED OR DAMAGED BY THE CONTRACTOR SHALL BE RETURNED TO THEIR ORIGINAL CONDITION AT NO EXPENSE TO THE OWNER.
6. ALL EXISTING PAVEMENT DAMAGED SHALL BE REPAIRED AT NO ADDITIONAL COST TO THE OWNER.
7. THE CONTRACTOR SHALL BE SOLELY RESPONSIBLE FOR SITE SECURITY AND JOB SAFETY. ALL CONSTRUCTION ACTIVITY SHALL BE IN ACCORDANCE WITH OSHA AND LOCAL REGULATIONS AND STANDARDS.
8. CONTRACTOR SHALL BE RESPONSIBLE FOR PROTECTING ALL EXISTING STRUCTURES TO REMAIN.
9. TOWN WHARF LIVE LOAD SHALL NOT EXCEED 200 PSF OR MAX WHEEL LOAD: 6 TONS OR MAX COMBINED AXLE LOAD: 12 TONS
10. CONTRACTOR SHALL SUBMIT DETAILS OF ALL MATERIALS OR EQUIPMENT SHOWING COMPLIANCE WITH ABOVE LIMITS FOR APPROVAL PRIOR TO LOADING.

ENVIRONMENTAL

11. CONTRACTOR SHALL COMPLY WITH ALL ENVIRONMENTAL REQUIREMENTS AND PERMIT CONDITIONS.
12. CONTRACTOR SHALL CONFINE ALL OTHER TEMPORARY STOCKPILES OF EXCAVATED MATERIAL OR IMPORTED FILL USING HAY BALES AND FILTER FABRIC.
13. CONTRACTOR SHALL PROVIDE CONTAINMENT FOR ALL WORK IN OR OVER WATER. BOTTOM WEIGHTED SILT CURTAINS SHALL BE PROVIDED TO ENCLOSE WORK LIMITS. SILT CURTAINS SHALL BE INSTALLED PRIOR TO COMMENCEMENT AND REMOVED AFTER COMPLETION OF WORK IN EACH AREA. SILT CURTAIN INSTALLATION AND PHASING SCHEDULE SHALL BE SUBMITTED BY CONTRACTOR. SILT CURTAINS SHALL BE MAINTAINED IN PROPER WORKING CONDITION DURING CONSTRUCTION.
14. CONTRACTOR SHALL PROVIDE CONFINED CONCRETE TRUCK WASHDOWN AREA AT A LOCATION TO BE APPROVED BY THE ENGINEER. WASHDOWN AREA SHALL INCLUDE PROTECTION TO PAVEMENT, A PERIMETER WALL AND A FILTER FABRIC LINER. NO RUNOFF CONTAINING CEMENT OR OTHER SUSPENDED SOLIDS WILL BE PERMITTED. ALL MATERIALS SHALL BE COMPLETELY REMOVED ON COMPLETION OF CONSTRUCTION AND DISPOSED OF AT A LICENSED LOCATION.

DEMOLITION

15. ALL EXCESS MATERIALS SHALL BECOME THE PROPERTY OF THE CONTRACTOR & BE DISPOSED OF OFF SITE.

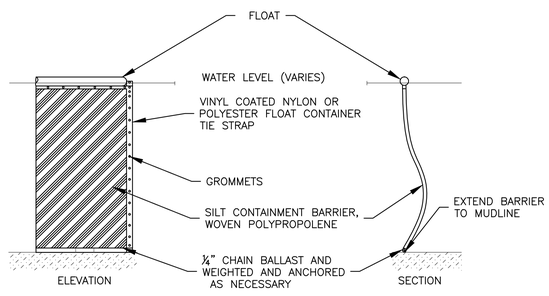

B 5 BARRIER CURTAIN DETAIL

SCALE: N.T.S.

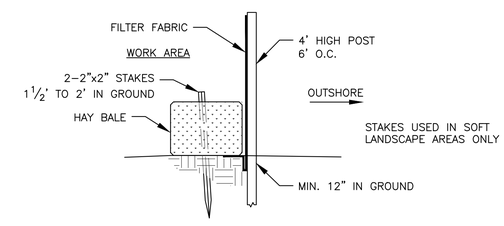

C 5 SILTATION FENCE WITH HAYBALES

SCALE: N.T.S.

0 30 60

SCALE: 1" = 30'

COMMONWEALTH OF MASSACHUSETTS
RUSSELL J. TITMUSS
STRUCTURAL
No. 46514
REGISTERED PROFESSIONAL ENGINEER

R.J. Titmuss
11/26/14

SITE PREPARATION

WHARF REPLACEMENT PROJECT-PHASE I

TOWN OF PLYMOUTH
PLYMOUTH, MA
NOVEMBER 2014

REVISIONS	

BCE Bourne Consulting Engineering, PC
3 Beal Street
Franklin, MA 02038
TEL. (508) 533-6666 FAX. (508) 533-0600

DRAWN: JSF
CHECKED: RJT
APPROVED: RJT
DATE: 11/26/14

DRAWING NO. 34032-01-05

SHEET 5 OF 27

File: X:\34946-\34032 PLYMOUTH T WHARF PHASE I\FINAL DESIGN\SHT-05 SITE PREP PLAN.DWG - 11/12/2012 1:02 PM

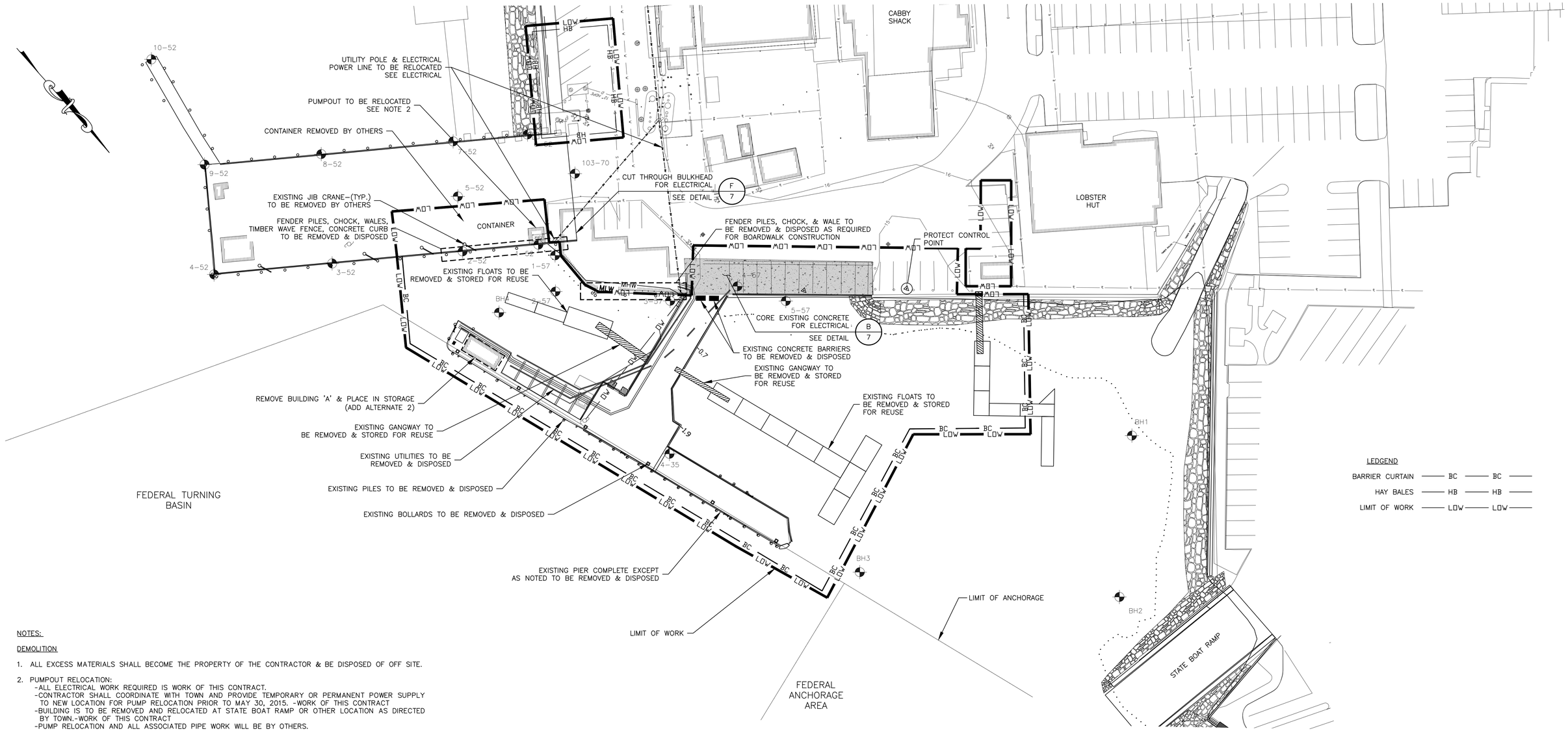

A 6 DEMOLITION–PLAN

SCALE: 1"=30'–0"

NOTES:

DEMOLITION

1. ALL EXCESS MATERIALS SHALL BECOME THE PROPERTY OF THE CONTRACTOR & BE DISPOSED OF OFF SITE.

2. PUMPOUT RELOCATION:
   - -ALL ELECTRICAL WORK REQUIRED IS WORK OF THIS CONTRACT.
   - -CONTRACTOR SHALL COORDINATE WITH TOWN AND PROVIDE TEMPORARY OR PERMANENT POWER SUPPLY TO NEW LOCATION FOR PUMP RELOCATION PRIOR TO MAY 30, 2015. -WORK OF THIS CONTRACT
   - -BUILDING IS TO BE REMOVED AND RELOCATED AT STATE BOAT RAMP OR OTHER LOCATION AS DIRECTED BY TOWN.-WORK OF THIS CONTRACT
   - -PUMP RELOCATION AND ALL ASSOCIATED PIPE WORK WILL BE BY OTHERS.

COMMONWEALTH OF MASSACHUSETTS RUSSELL J. TITHUSS STRUCTURAL No. 46514 REGISTERED PROFESSIONAL ENGINEER

11/26/14

0 30 60

SCALE: 1" = 30'

DEMOLITION PLAN

WHARF REPLACEMENT PROJECT–PHASE I

TOWN OF PLYMOUTH

PLYMOUTH, MA

NOVEMBER 2014

REVISIONS

BCE Bourne Consulting Engineering, PC
3 Beal Street
Franklin, MA 02038
TEL. (508) 533-6666 FAX. (508) 533-0600

DRAWN: JSF
CHECKED: RJT
APPROVED: RJT
DATE: 11/26/14

DRAWING NO. 34032-01-06

SHEET 6 OF 27

File: X:\34946-\34032 PLYMOUTH T WHARF PHASE I\FINAL DESIGN\SHT-06 DEMO PLAN.DWG - 11/12/2012 1:02 PM

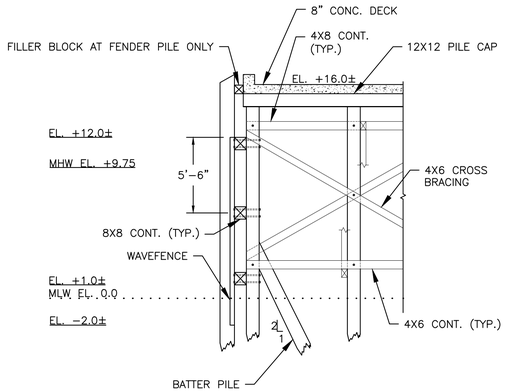

A/7 EXISTING TOWN PIER SECTION

SCALE: 3/16"=1'-0"

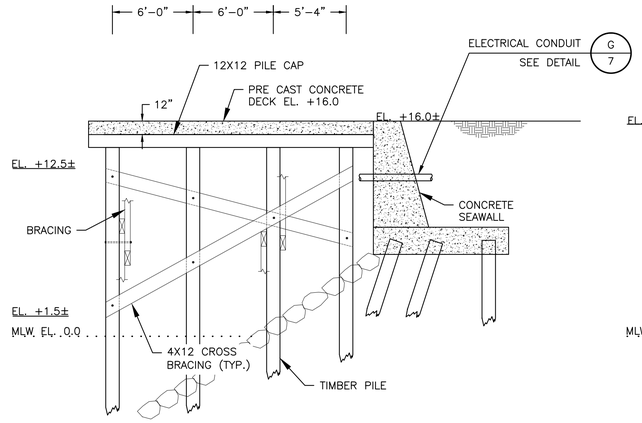

B/7 EXISTING PIER @ T-WHARF-SECTION

SCALE: 3/16"=1'-0"

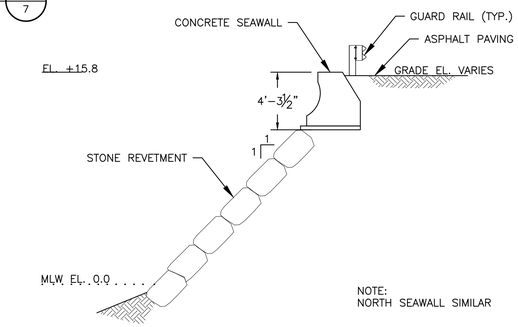

C/7 EXISTING SEAWALL

SCALE: 3/16"=1'-0"

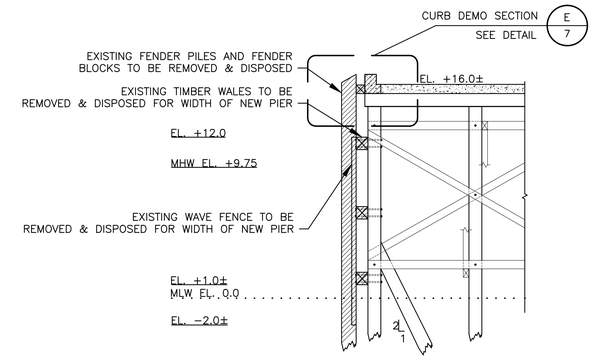

D/7 TOWN PIER DEMO SECTION

SCALE: 3/16"=1'-0"

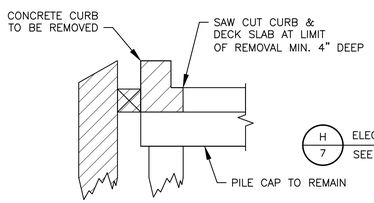

E/7 TOWN PIER CURB DEMO SECTION

SCALE: 1/2"=1'-0"

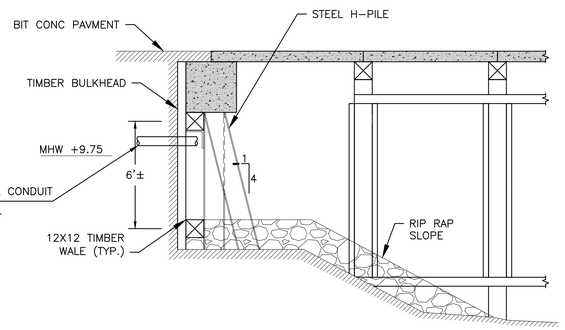

F/7 INSHORE BULKHEAD

SCALE: 1/4"=1'-0"

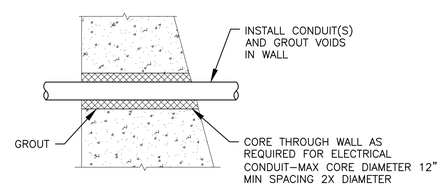

G/7 CONDUIT @ SEAWALL

SCALE: 1/2"=1'-0"

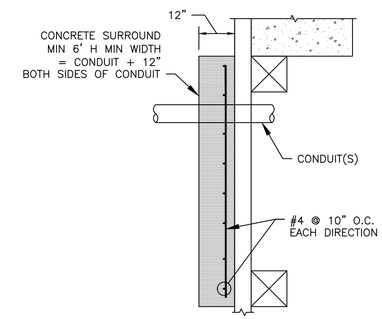

H/7 CONDUIT @ BULKHEAD

SCALE: 1/2"=1'-0"

NOTE: DRAIN LINE SIMILAR

COMMONWEALTH OF MASSACHUSETTS
RUSSELL J. TITAUSS
STRUCTURAL
No. 46514
REGISTERED
PROFESSIONAL ENGINEER

R. J. Titauss
11/26/14

EXISTING SECTIONS

WHARF REPLACEMENT
PROJECT-PHASE I
TOWN OF PLYMOUTH
PLYMOUTH, MA
NOVEMBER 2014

BCE Bourne Consulting Engineering, PC
3 Bent Street
Franklin, MA 02038
TEL. (508) 533-6666 FAX. (508) 533-0600

DRAWN:	JSF
CHECKED:	RJT
APPROVED:	RJT
DATE:	11/26/14

REVISIONS

DRAWING NO. 34032-01-07

SHEET 7 OF 27

File: X:\34946-\34032 PLYMOUTH T WHARF PHASE 1\FINAL DESIGN\SHT-07 EXISTING SECTIONS.DWG - 11/12/2012 1:02 PM

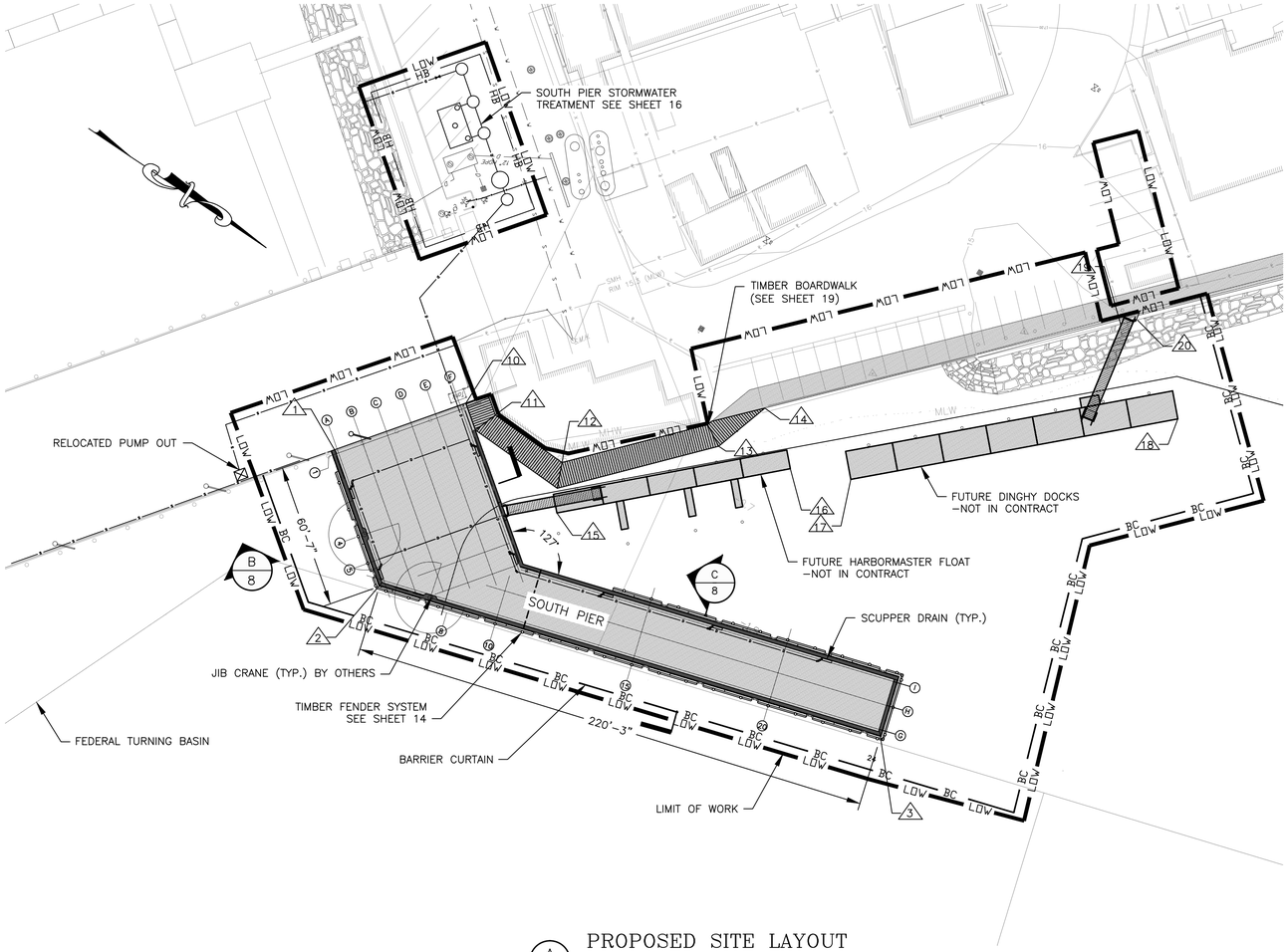

A/8 PROPOSED SITE LAYOUT

SCALE: 1"=30'-0"

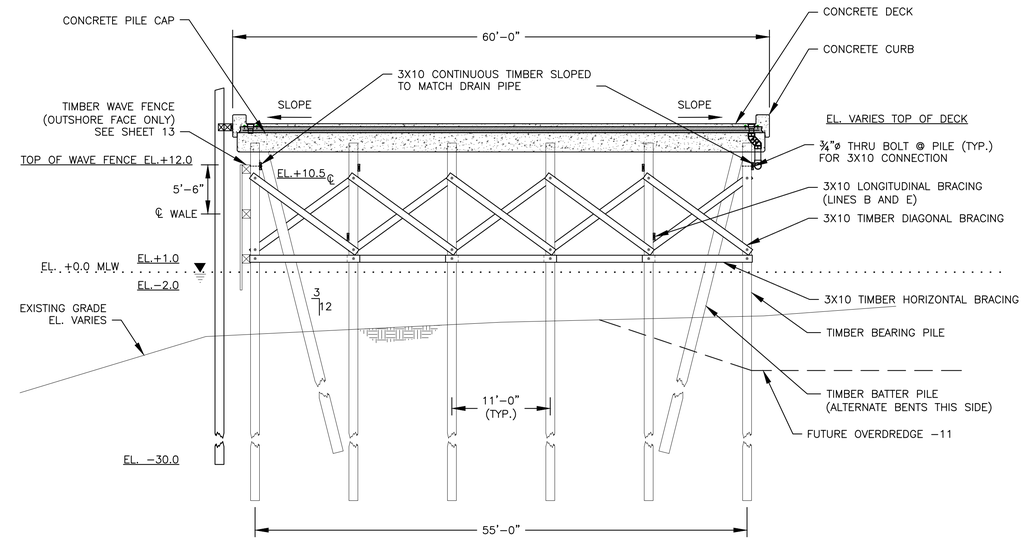

B/8 60' WIDE PIER

SCALE: 1/8" = 1'-0"

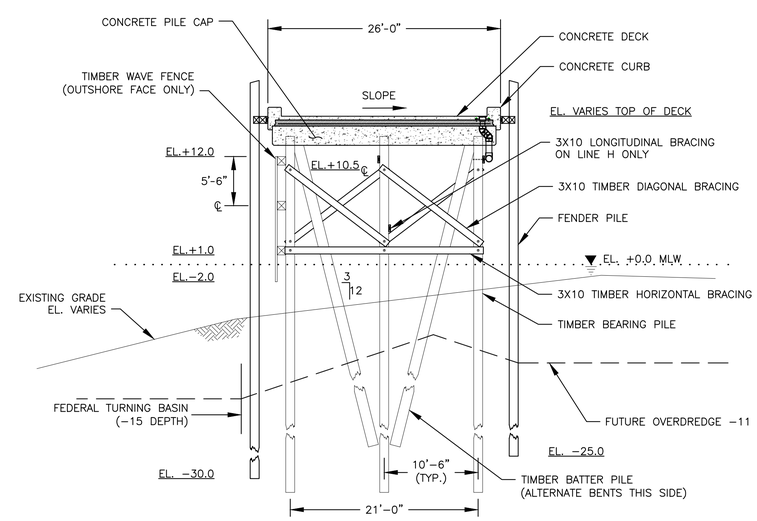

C/8 26' WIDE PIER

SCALE: 1/8" = 1'-0"

BARRIER CURTAIN	BC BC BC
HAY BALE	HB HB HB
CONTRACTOR STAGING	
LIMIT OF WORK	LOW LOW LOW

LAYOUT CONTROL POINTS

1	N 2812279.81 E 882935.14	17	N 2812470.20 E 882831.92
2	N 2812324.23 E 882973.66	18	N 2812574.53 E 882738.56
3	N 2812535.72 E 882916.14	19	N 281532.27 E 882713.05
10	N 2812315.17 E 882888.72	20	N 2812537.03 E 882708.19
11	N 2812324.55 E 882896.34		
12	N 2812366.65 E 882899.33		
13	N 2812415.49 E 882848.89		
14	N 2812423.71 E 882825.09		
15	N 2812371.92 E 882908.34		
16	N 2812446.12 E 882841.30		

COMMONWEALTH OF MASSACHUSETTS RUSSELL J. TITMUSS STRUCTURAL No. 46514 PROFESSIONAL ENGINEER

11/26/14

0 30 60

SCALE: 1" = 30'-0"

SITE LAYOUT /PIER SECTIONS

WHARF REPLACEMENT PROJECT-PHASE I

TOWN OF PLYMOUTH

PLYMOUTH, MA

NOVEMBER 2014

REVISIONS

BCE Bourne Consulting Engineering, PC
3 Bent Street
Franklin, MA 02038
TEL. (508) 533-6666 FAX. (508) 533-0600

DRAWN: JSF
CHECKED: RJT
APPROVED: RJT
DATE: 11/26/14

DRAWING NO. 34032-01-08

SHEET 8 OF 27

File: X:\34946-\34032 PLYMOUTH T WHARF PHASE I\FINAL DESIGN\SHT-08 PROPOSED CONDITIONS.DWG - 11/12/2012 1:02 PM

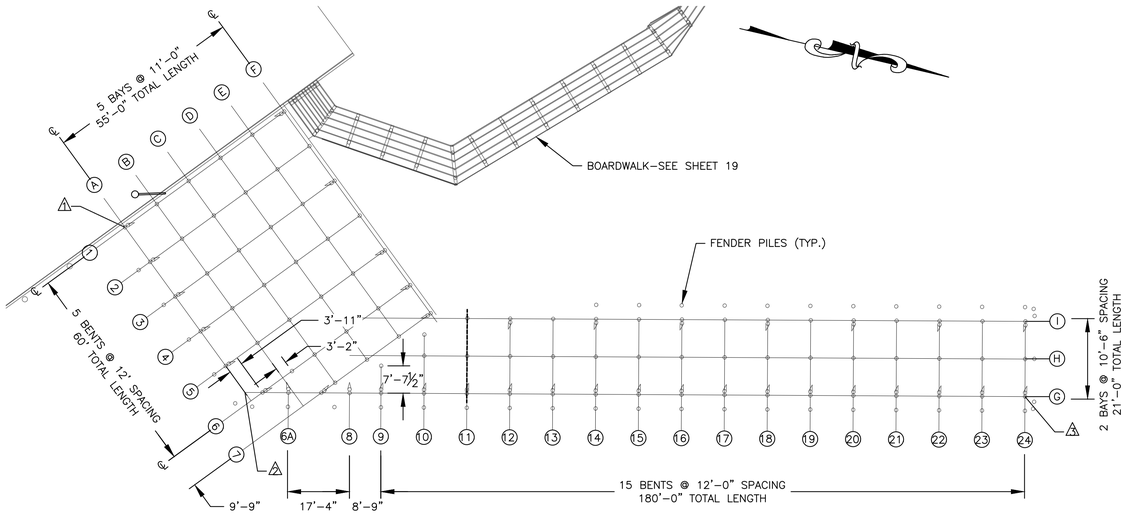

SOUTH PIER–PILE PLAN

A / 9

SCALE: 1"=20'-0"

NOTES:
1. ALL BEARING & BATTER PILES TO BE DRIVEN TO 24 TON SAFE WORKING LOAD.
2. FENDER PILES TO BE DRIVEN AFTER CURB INSTALLATION.
3. FENDER PILE TIP ELEVATION VARIES:
   –BENT 6 TO 24, GRID G TIP EL. –30.0
   –ALL OTHERS TIP EL. –25.0
4. ALL PILES TO HAVE S.S. BAND PER SPECIFICATIONS.
5. ALL BEARING & BATTER PILES CUT OFF ELEVATIONS VARY TO SUIT PIER SLOPE.

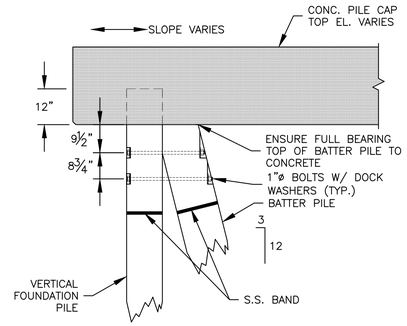

UPPER BATTER PILE CONNECTION

B / 9

SCALE: 1/2"=1'-0"

NOTES:
1. NOTCH PILES FOR FULL BEARING.
2. CROSS BRACING & DRAIN PIPE SUPPORT NOT SHOWN FOR CLARITY.

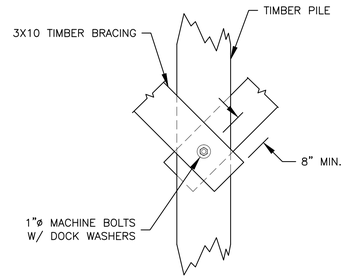

DIAGONAL BRACING CONNECTION DETAIL

C / 9

SCALE: 3/4"=1'-0"

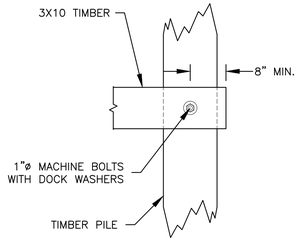

HORIZONTAL BRACING CONNECTION DETAIL

D / 9

SCALE: 3/4"=1'-0"

RUSSELL J. TITMUSS
STRUCTURAL
No. 46514
REGISTERED
PROFESSIONAL ENGINEER
COMMONWEALTH OF MASSACHUSETTS

R. J. Titmuss
11/26/14

PILE PLAN & DETAILS

WHARF REPLACEMENT
PROJECT–PHASE I
TOWN OF PLYMOUTH
PLYMOUTH, MA
NOVEMBER 2014

REVISIONS

BCE Bourne Consulting Engineering, PC
3 Bent Street
Franklin, MA 02038
TEL. (508) 533-6666 FAX. (508) 533-0600

DRAWN: JSF
CHECKED: RJT
APPROVED: RJT
DATE: 11/26/14

DRAWING NO. 34032-01-09

SHEET 9 OF 27

File: X:\34946-\34032 PLYMOUTH T WHARF PHASE 1\FINAL DESIGN\SHT-09 PIER PILE PLAN.DWG - 11/12/2012 1:02 PM

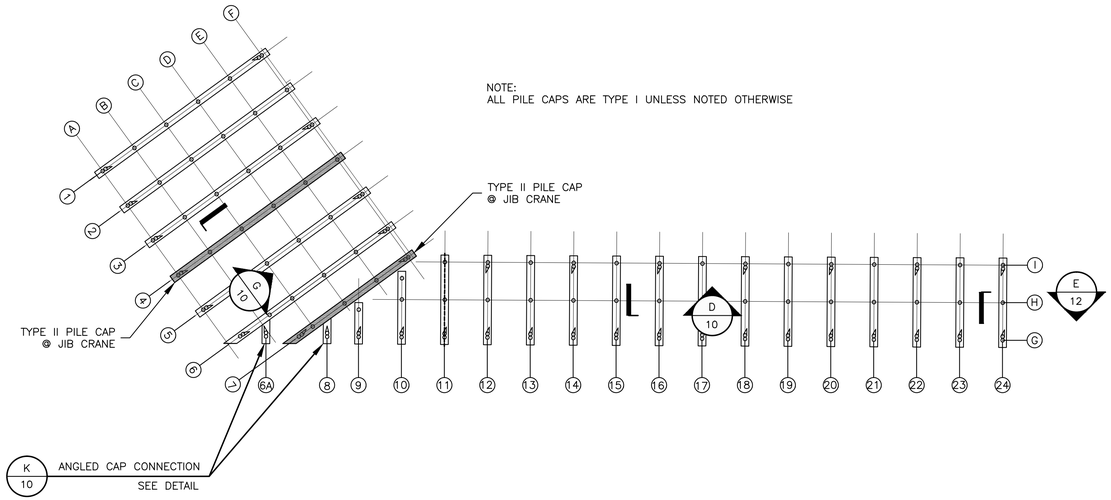

A/10 SOUTH PIER – PILE CAP PLAN

SCALE: 1"=20'-0"

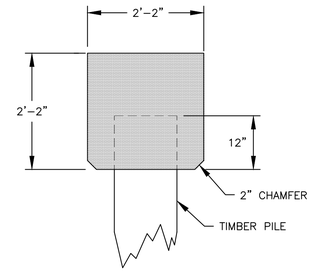

C/10 TYPE I PILE CAP–SECTION

SCALE: 3/4"=1'-0"

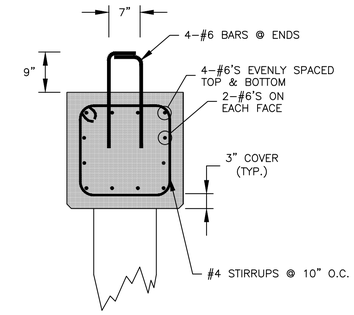

TYPE I PILE CAP REINFORCING (TYP.)

D/10

SCALE: 3/4"=1'-0"

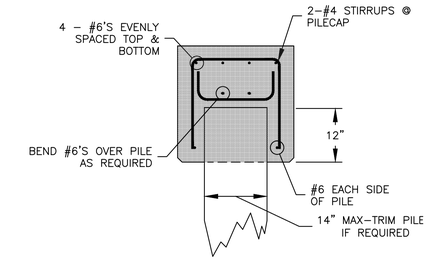

TYPE I PILE CAP REINFORCING @ PILE (TYP.)

E/10

SCALE: 3/4"=1'-0"

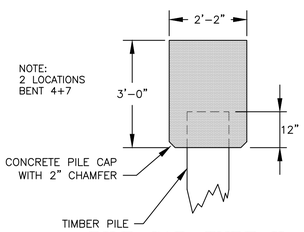

F/10 PILE CAP–TYPE II

SCALE: 1/2"=1'-0"

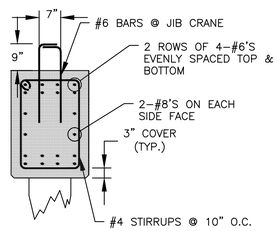

G/10 PILE CAP REINFORCING–TYPE II

SCALE: 1/2"=1'-0"

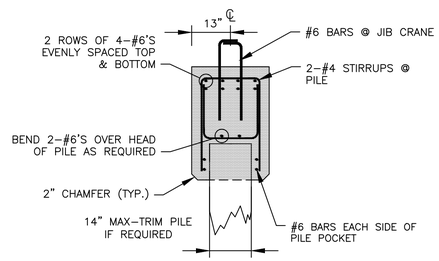

H/10 PILE CAP REINFORCING @ PILE–TYPE II

SCALE: 1/2"=1'-0"

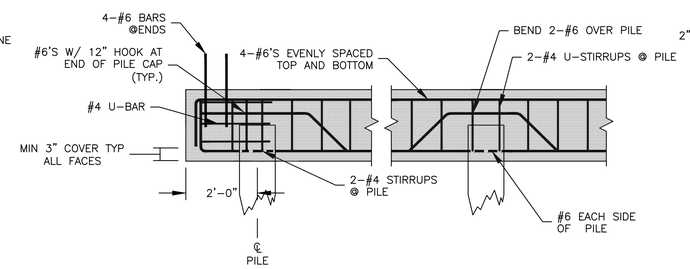

I/10 TYPE I PILE CAP REINFORCING

SCALE: 1/2"=1'-0"

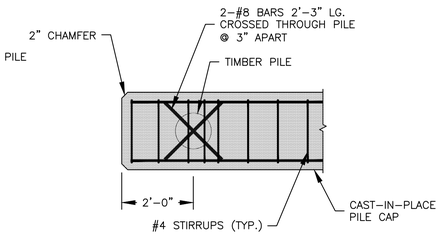

J/10 PILE CONNECTION

SCALE: 1/2"=1'-0"

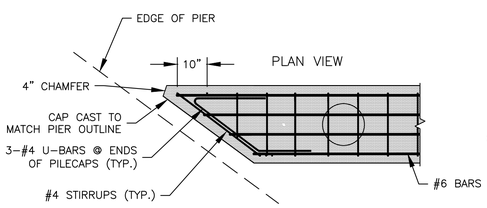

K/10 ANGLED PILE CAP (TYP.)

SCALE: 1/2"=1'-0"

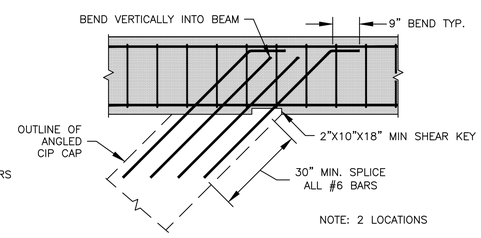

BENTS 6A,8 ANGLED CAP CONNECTION

L/10

SCALE: 1/2"=1'-0"

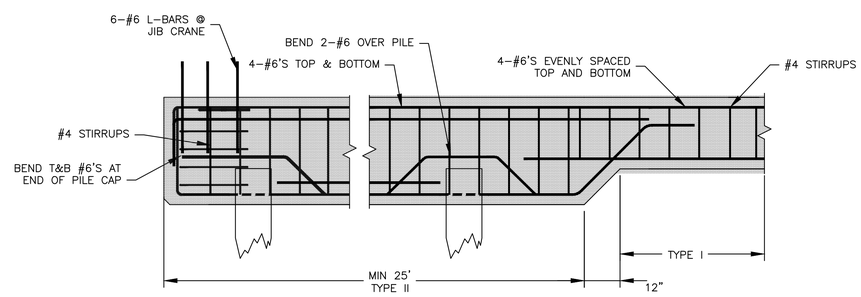

M/10 PILE CAP REINFORCMENT–TYPE II

SCALE: 1/2"=1'-0"

NOTES:
1. DETAILS SHOWN ARE BASED ON CAST IN PLACE PILE CAPS.
2. PILE CAP ELEVATIONS VARY TO MATCH FINISHED GRADE.
3. ALL PILE CAPS SLOPE TO MATCH FINISHED GRADE.

PILE CAP LAYOUT PLAN AND DETAILS

WHARF REPLACEMENT
PROJECT–PHASE I
TOWN OF PLYMOUTH
PLYMOUTH, MA
NOVEMBER 2014

BCE Bourne Consulting Engineering, PC
3 Bent Street
Franklin, MA 02038
TEL. (508) 533-6666 FAX. (508) 533-0600

DRAWN: JSF
CHECKED: RJT
APPROVED: RJT
DATE: 11/26/14

REVISIONS

DRAWING NO. 34032-01-10

SHEET 10 OF 27

File: X:\34946-\34032 PLYMOUTH T WHARF PHASE I\FINAL DESIGN\SHT-10 PIER PILE CAP PLAN.DWG - 11/12/2012 1:02 PM

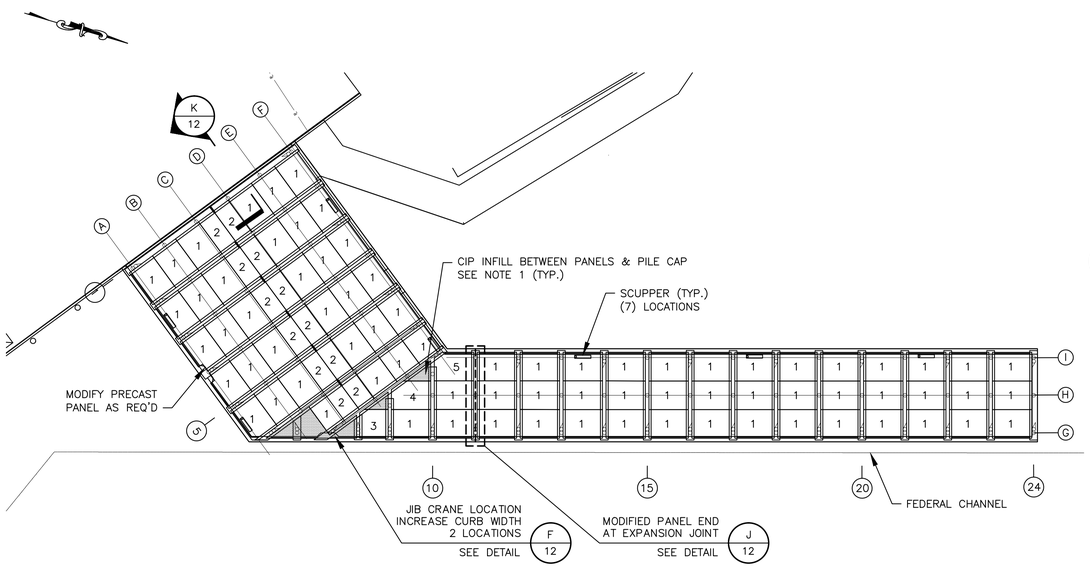

A 11 SOUTH PIER DECK PANEL LAYOUT

SCALE: 1"=20'-0"

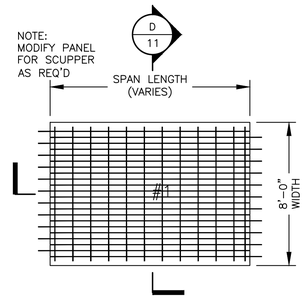

B 11 PRECAST DECK PLANK (TYP.)

SCALE: 1/4"=1'-0"

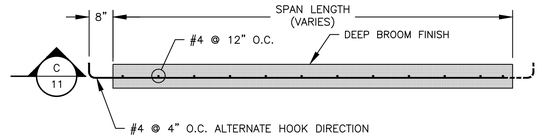

C 11 DECK PLANK – LONG SECTION

SCALE: 1/2"=1'-0"

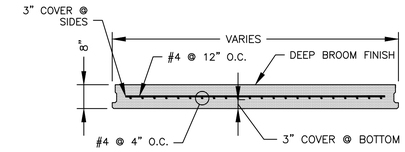

D 11 DECK PLANK– CROSS SECTION

SCALE: 1/2"=1'-0"

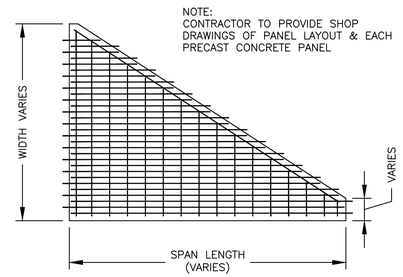

E 11 ANGLED DECK PANEL PANEL #3,#4,#5

SCALE: 1/4"=1'-0"

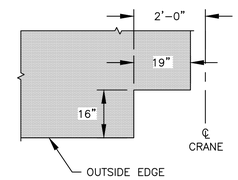

F 11 PANEL CUT OUT @ JIB CRANE

SCALE: 1/2"=1'-0"

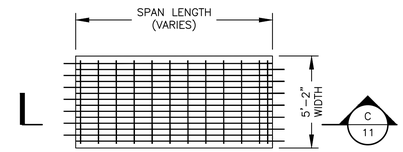

G 11 DECK PANEL #2

SCALE: 1/4"=1'-0"

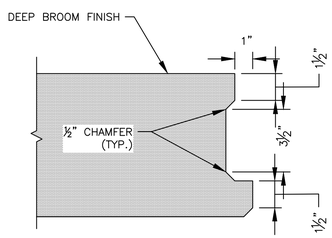

H 11 EDGE DETAIL

SCALE: 3"=1'-0"

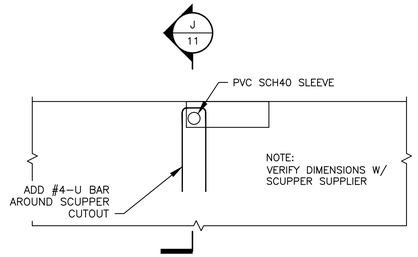

I 11 DRAINAGE SCUPPER DETAIL

SCALE: 1/4"=1'-0"

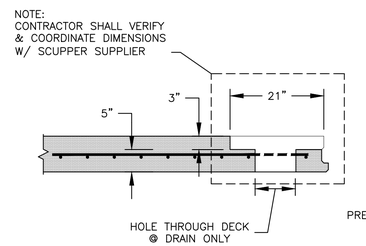

J 11 SECTION @ SCUPPER

SCALE: 3/4"=1'-0"

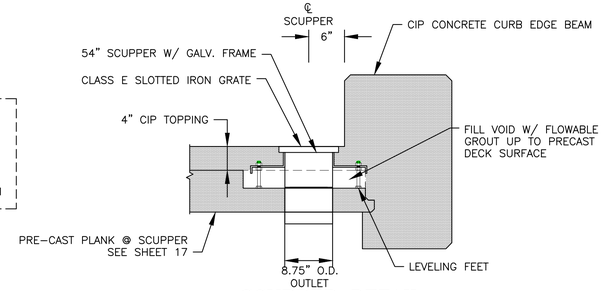

K 11 SCUPPER DETAIL

SCALE: 1"=1'-0"

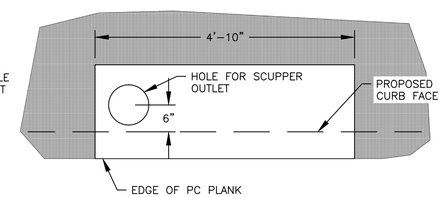

L 11 SCUPPER–PLAN

SCALE: 3/4"=1'-0"

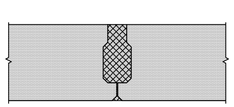

M 11 PRECAST SLAB INFILL

SCALE: 1-1/2"=1'-0"

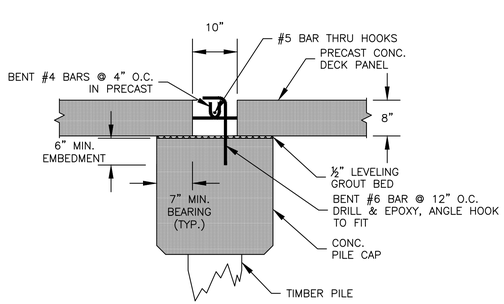

NOTE: CIP TOPPING NOT SHOWN

N 11 DECK PLANK/PILE CAP CONN.

SCALE: 3/4"=1'-0"

RUSSELL J. TITMUSS STRUCTURAL No. 46514 REGISTERED PROFESSIONAL ENGINEER

R.J. Titmuss 11/26/14

NOTES:
1. VOID AREAS TO BE FORMED & CAST IN PLACE AS REQ'D
2. PROVIDE GROUT BED FOR PRECAST DECK PANELS TO SIT WITH FULL BEARING ON PILE CAP.

PRECAST CONCRETE DECK LAYOUT & DETAILS

WHARF REPLACEMENT
PROJECT–PHASE I
TOWN OF PLYMOUTH
PLYMOUTH, MA
NOVEMBER 2014

REVISIONS	

BCE Bourne Consulting Engineering, PC
3 Bent Street
Franklin, MA 02038
TEL. (508) 533-8666 FAX. (508) 533-0600

DRAWN: JSF
CHECKED: RJT
APPROVED: RJT
DATE: 11/26/14

DRAWING NO. 34032–01–11

SHEET 11 OF 27

File: X:\34946-\34032 PLYMOUTH T WHARF PHASE I\FINAL DESIGN\SHT-11 DECK PANEL LAYOUT PLAN.DWG - 11/12/2012 1:02 PM

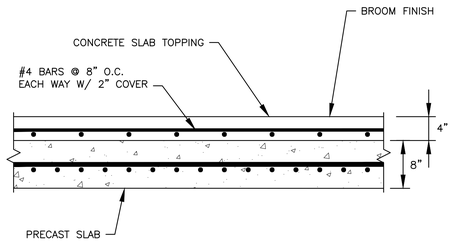

A/12 DECK REINFORCING DETAIL

SCALE: 1/2"=1'-0"

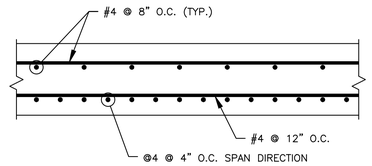

B/12 CIP DECK REINFORCING DETAIL

SCALE: 1/2"=1'-0"

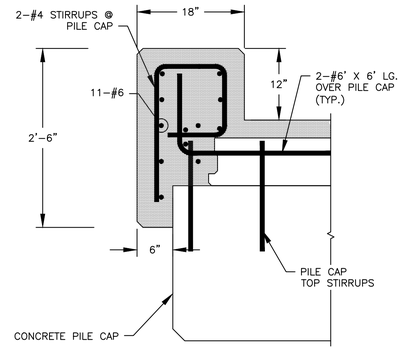

C/12 EDGE BEAM @ PILE CAP

SCALE: 1"=1'-0"

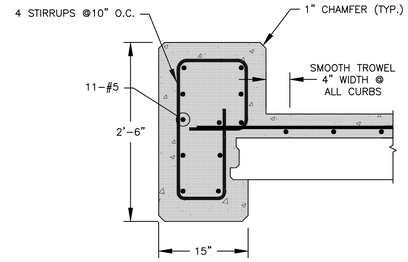

D/12 EDGE BEAM DETAIL-TYP

SCALE: 1"=1'-0"

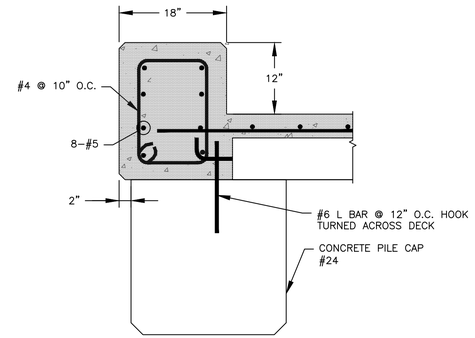

E/12 CURB DETAIL @ END

SCALE: 1"=1'-0"

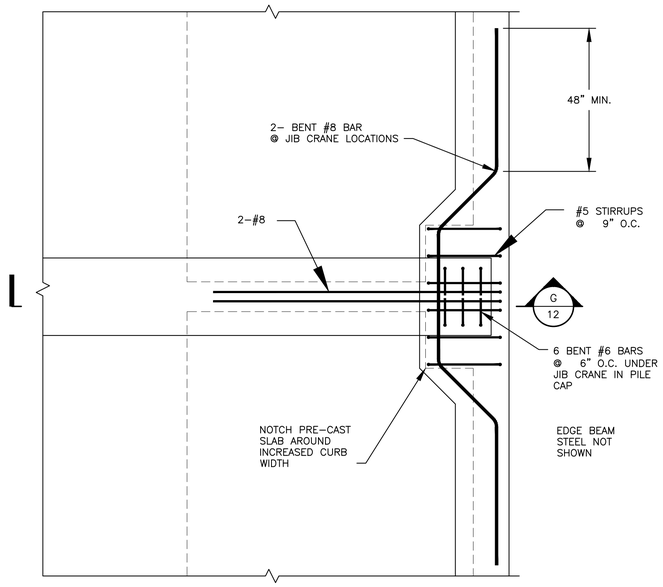

F/12 JIB CRANE FOUNDATION-PLAN

SCALE: 1/2"=1'-0"

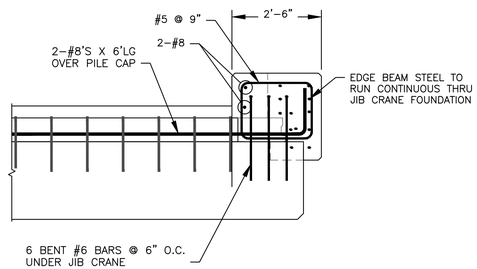

G/12 JIB CRANE FOUNDATION-SECTION

SCALE: 1/2"=1'-0"

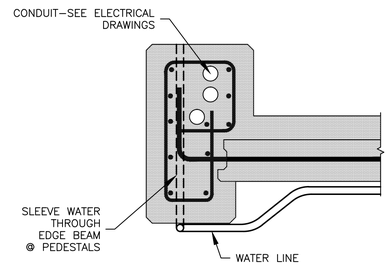

H/12 CONDUIT DETAIL

SCALE: 1"=1'-0"

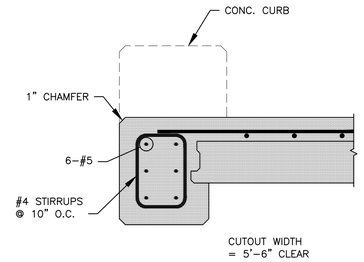

I/12 GANGWAY CUTOUT

SCALE: 1"=1'-0"

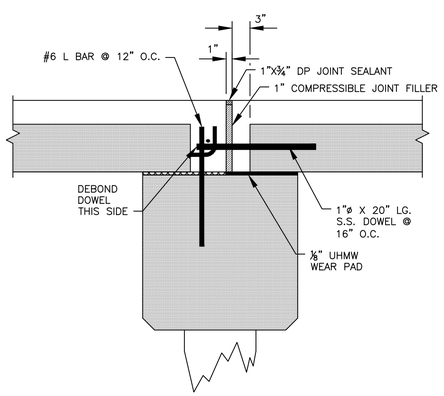

J/12 EXPANSION JOINT

SCALE: 1"=1'-0"

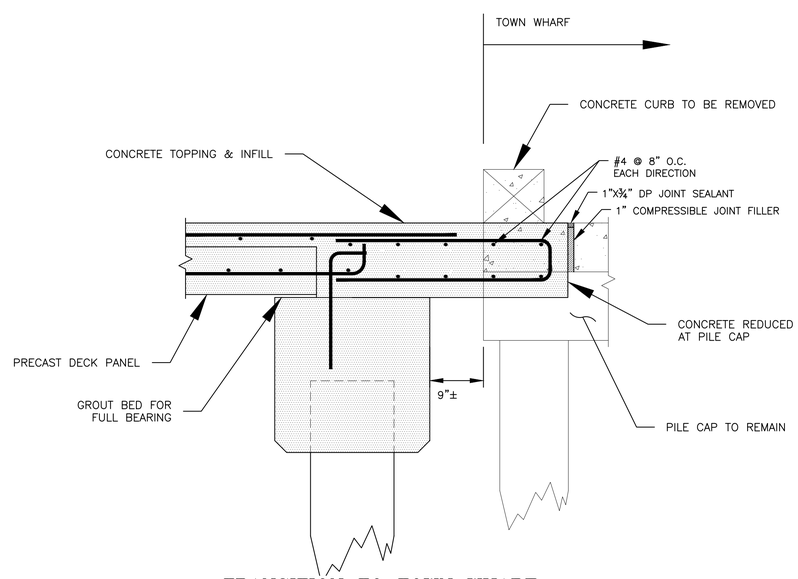

K/12 TRANSITION TO TOWN WHARF

SCALE: 1"=1'-0"

NOTES:
1. ALL EXPOSED CONCRETE SURFACES SHALL HAVE A 1" CHAMFER UNLESS NOTED OTHERWISE.
2. EDGE OF CIP CONCRETE TOPPING SHALL BE FINISHED W/ EDGING TROWEL.

R. J. Titmuss
11/26/14

DECK CONCRETE DETAILS

WHARF REPLACEMENT
PROJECT-PHASE I
TOWN OF PLYMOUTH
PLYMOUTH, MA
NOVEMBER 2014

REVISIONS	

BCE Bourne Consulting Engineering, PC
3 Bent Street
Franklin, MA 02038
TEL. (508) 533-6666 FAX. (508) 533-0600

DRAWN: JSF
CHECKED: RJT
APPROVED: RJT
DATE: 11/26/14

DRAWING NO. 34032-01-12

SHEET 12 OF 27

File: X:\34946-\34032 PLYMOUTH T WHARF PHASE 1\FINAL DESIGN\SHT-12 DECK CONC DETAILS.DWG - 11/12/2012 1:02 PM

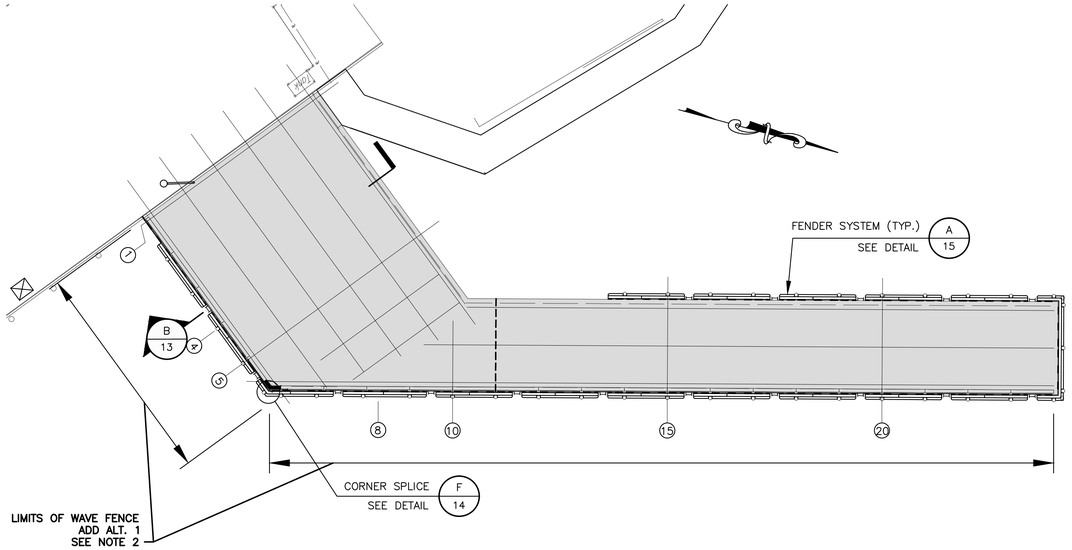

FENDER SYSTEM/WAVE FENCE

A/13

SCALE: 1"=20'-0"

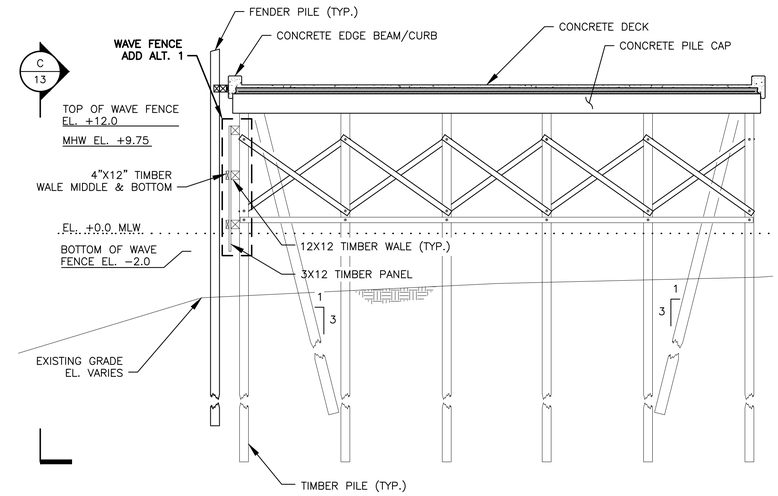

NOTE:
1. BASE BID INCLUDES FENDER SYSTEM, INCLUDING, BUT NOT LIMITED TO, ALL FENDER PILES, WALES, CHOCKS, ANCHORS, & FASTENERS.
2. ADD ALTERNATE #1 WAVE FENCE INCLUDES, BUT IS NOT LIMITED TO,
   - (3) 12X12 WALES
   - (3) 4X12 OUTER WALES
   - 3X12 TIMBER BOARDS ASSEMBLED INTO PANEL, FASTENERS AND LADDER ATTACHMENTS

FENDER SYSTEM/ WAVE FENCE – SECTION (TYP.)

B/13

SCALE: 1/8"=1'-0"

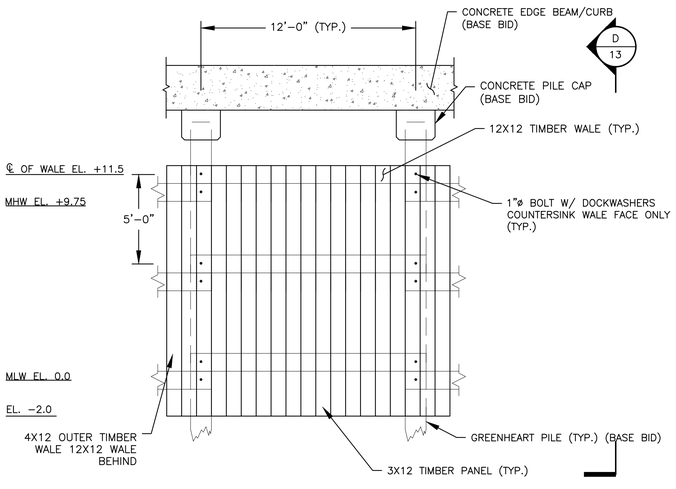

WAVE FENCE ELEVATION

C/13

SCALE: 1/4"=1'-0"

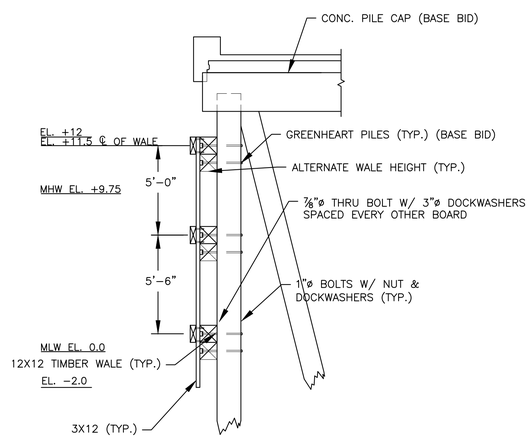

WAVE FENCE SECTION

D/13

SCALE: 1/4"=1'-0"

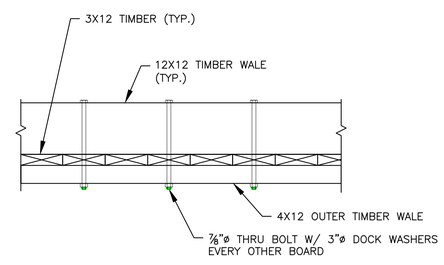

TIMBER PANEL – PLAN

E/13

SCALE: 3/4"=1'-0"

NOTE: FENDER SYSTEM (BASE BID) NOT SHOWN FOR CLARITY

WAVE FENCE
ADD ALTERNATE #1

RUSSELL J. TITMUSS STRUCTURAL No. 46514 REGISTERED PROFESSIONAL ENGINEER COMMONWEALTH OF MASSACHUSETTS

R.J. Titmuss
11/26/14

FENDER SYSTEM/ WAVE FENCE–PLAN

WHARF REPLACEMENT
PROJECT–PHASE I
TOWN OF PLYMOUTH
PLYMOUTH, MA
NOVEMBER 2014

BCE Bourne Consulting Engineering PC
3 Beal Street
Franklin, MA 02038
TEL. (508) 533-6666 FAX. (508) 533-0600

DRAWN: JSF
CHECKED: RJT
APPROVED: RJT
DATE: 11/26/14

REVISIONS

DRAWING NO. 34032-01-13

SHEET 13 OF 27

File: X:\34946-\34032 PLYMOUTH T WHARF PHASE 1\FINAL DESIGN\SHT-13 WAVE FENCE - PLAN, ELEVATIONS & SECTIONS.DWG - 11/12/2012 1:02 PM

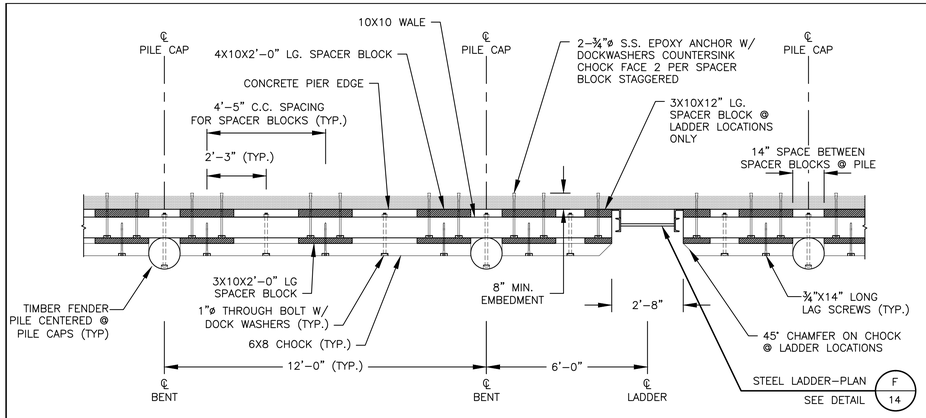

FENDER PLAN (TYP.)

A 15

SCALE: 3/8"=1'-0"

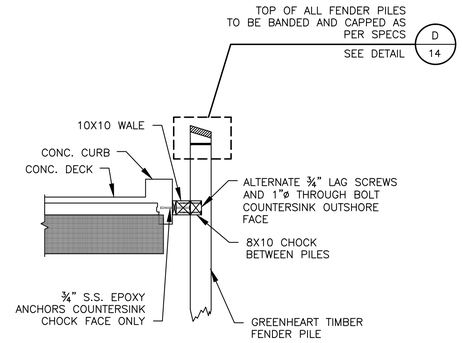

SECTION @ CHOCK

B 15

SCALE: 1/4"=1'-0"

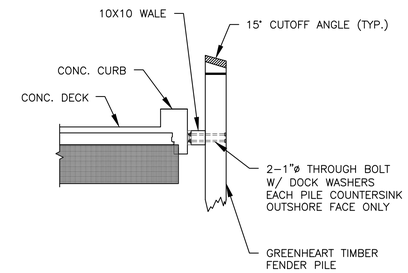

SECTION @ FENDER PILE

C 15

SCALE: 1/4"=1'-0"

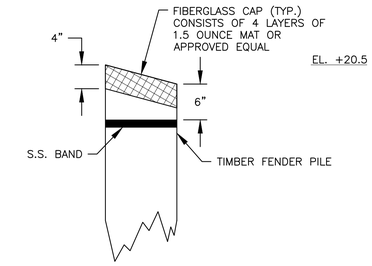

FENDER PILE CAPPING

D 14

SCALE: 1"=1'-0"

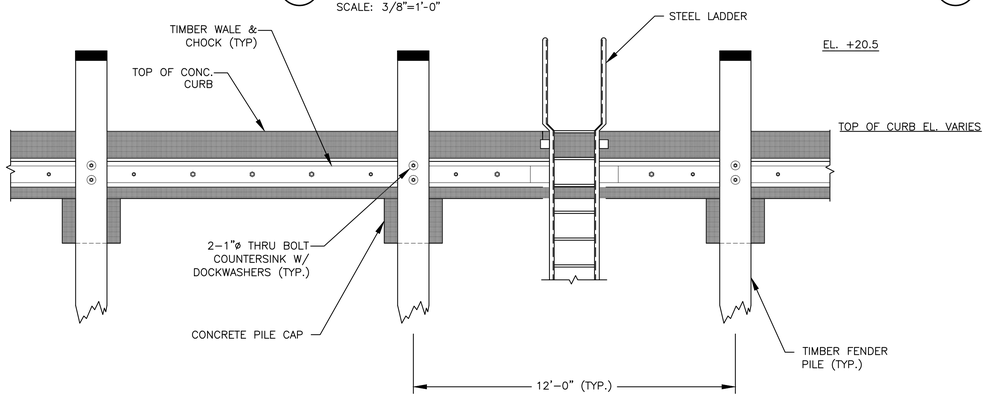

FENDER ELEVATION (TYP.)

D 14

SCALE: 3/8"=1'-0"

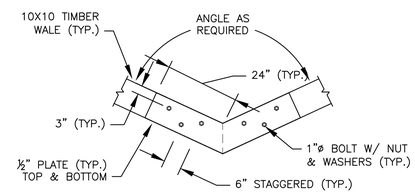

CORNER SPLICE DETAIL

E 14

SCALE: 1/2"=1'-0"

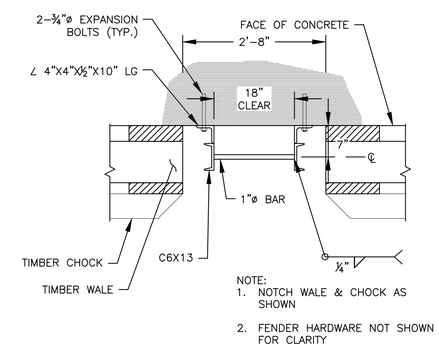

NOTE:
1. NOTCH WALE & CHOCK AS SHOWN
2. FENDER HARDWARE NOT SHOWN FOR CLARITY

STEEL LADDER-PLAN

F 14

SCALE: 3/4"=1'-0"

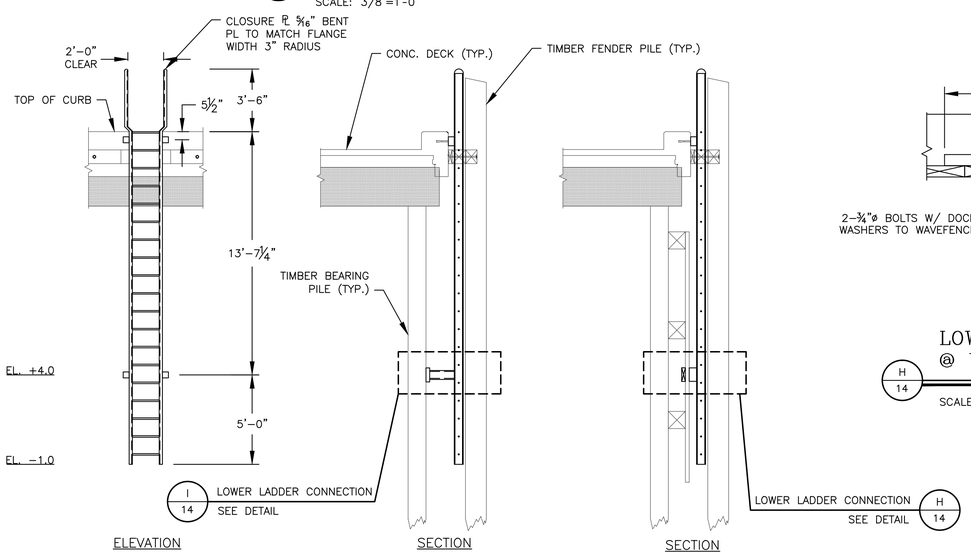

NOTE: SECTION APPLIES IF ADD ALT 1-WAVE FENCE INCLUDED IN CONTRACT

STEEL LADDER-ELEVATION & SECTIONS

G 14

SCALE: 1/4"=1'-0"

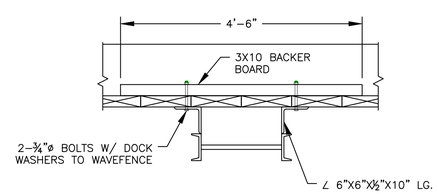

LOWER LADDER CONNECTION @ WAVEFENCE

H 14

SCALE: 3/4"=1'-0"

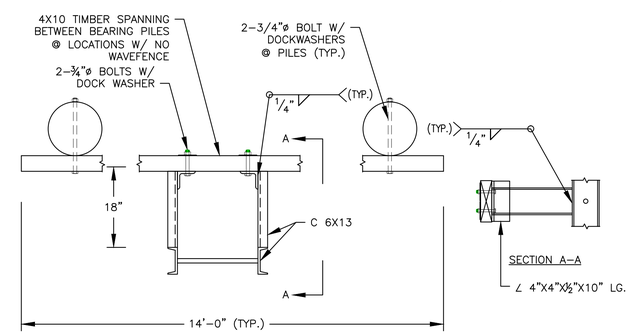

LOWER LADDER SUPPORT

I 14

SCALE: 3/4"=1'-0"

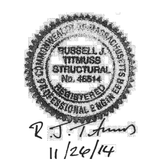

TIMBER DETAILS

WHARF REPLACEMENT
PROJECT-PHASE I
TOWN OF PLYMOUTH
PLYMOUTH, MA
NOVEMBER 2014

NOTE:
1. ALL TIMBER SHALL BE TREATED SYP NO. 2 U.N.O. FOR MARINE EXPOSURE.
2. ALL HARDWARE SHALL BE HOT DIP GALVANIZED.
3. ALL BOLTS SHALL BE ASTM A307 FOR TIMBER CONNECTIONS.

REVISIONS

BCE Bourne Consulting Engineering, PC
3 Bent Street
Franklin, MA 02038
TEL. (508) 533-6666 FAX. (508) 533-0600

DRAWN: JSF
CHECKED: RJT
APPROVED: RJT
DATE: 11/26/14

DRAWING NO. 34032-01-14

File: X:\34946-\34032 PLYMOUTH T WHARF PHASE 1\FINAL DESIGN\SHT-14 WAVEFENCE DETAILS.DWG - 11/12/2012 1:02 PM

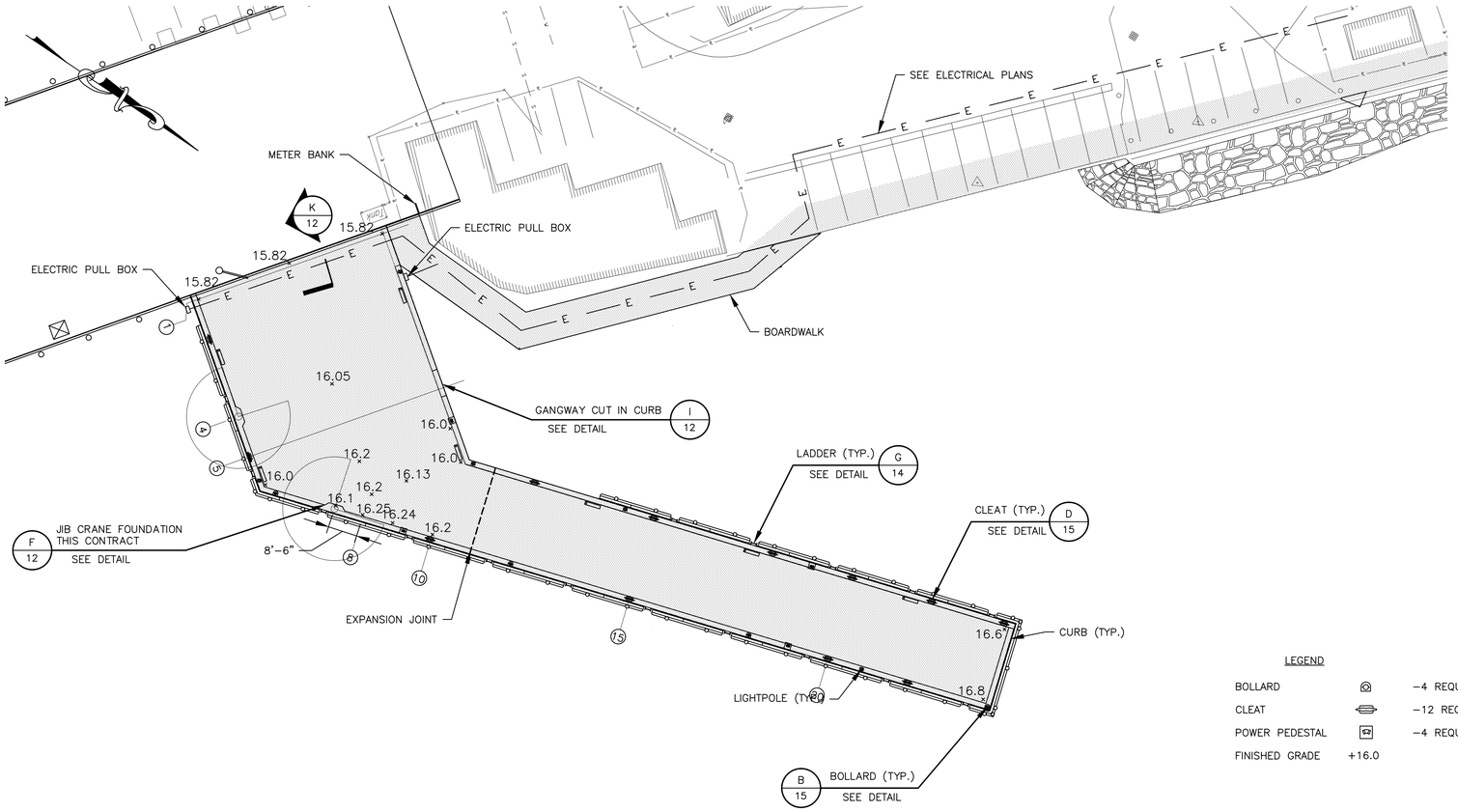

A 15 DECK LAYOUT PLAN

SCALE: 1"=20'-0"

LEGEND

BOLLARD		-4 REQUIRED
CLEAT		-12 REQUIRED
POWER PEDESTAL		-4 REQUIRED
FINISHED GRADE	+16.0	

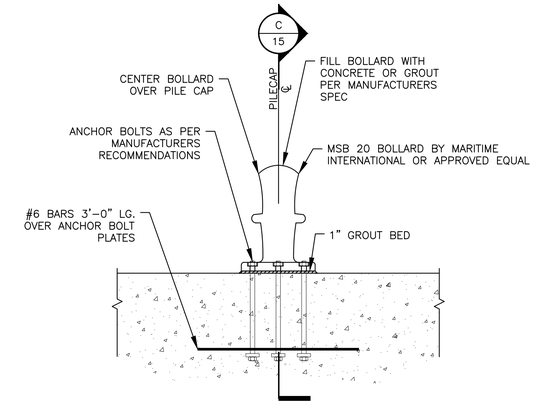

B 15 BOLLARD SECTION

SCALE: 3/4"=1'-0"

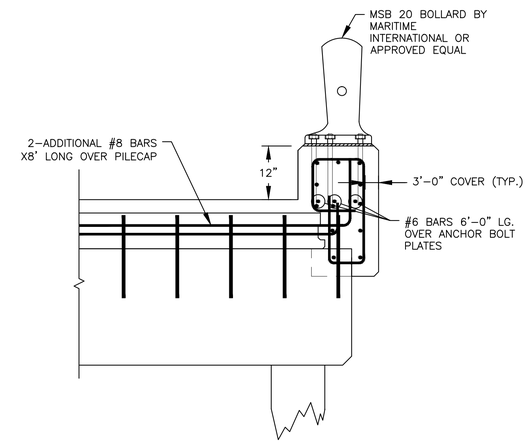

C 15 BOLLARD DETAIL

SCALE: 1/2"=1'-0"

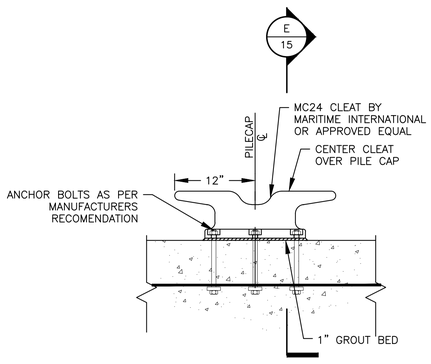

D 15 CLEAT SECTION

SCALE: N.T.S.

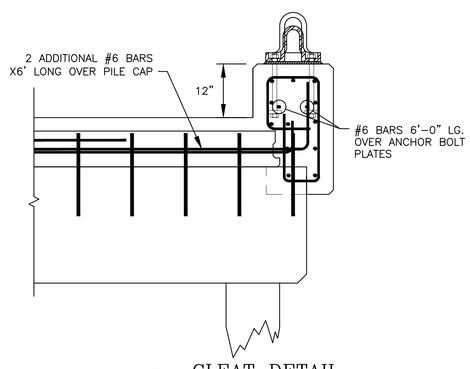

E 15 CLEAT DETAIL

SCALE: 1/2"=1'-0"

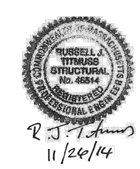

R.J. Titmus
11/26/14

DECK LAYOUT PLAN

WHARF REPLACEMENT PROJECT-PHASE I

TOWN OF PLYMOUTH
PLYMOUTH, MA
NOVEMBER 2014

0 20 40
SCALE: 1" = 20'-0"

REVISIONS

BCE Bourne Consulting Engineering, PC
3 Bent Street
Franklin, MA 02038
TEL. (508) 533-6666 FAX. (508) 533-0600

DRAWN: JSF
CHECKED: RJT
APPROVED: RJT
DATE: 11/26/14

DRAWING NO. 34032-01-15

SHEET 15 OF 27

File: X:\34946-\34032 PLYMOUTH T WHARF PHASE 1\FINAL DESIGN\SHT-15 DECK FIXTURE LAYOUT.DWG - 11/12/2012 1:02 PM

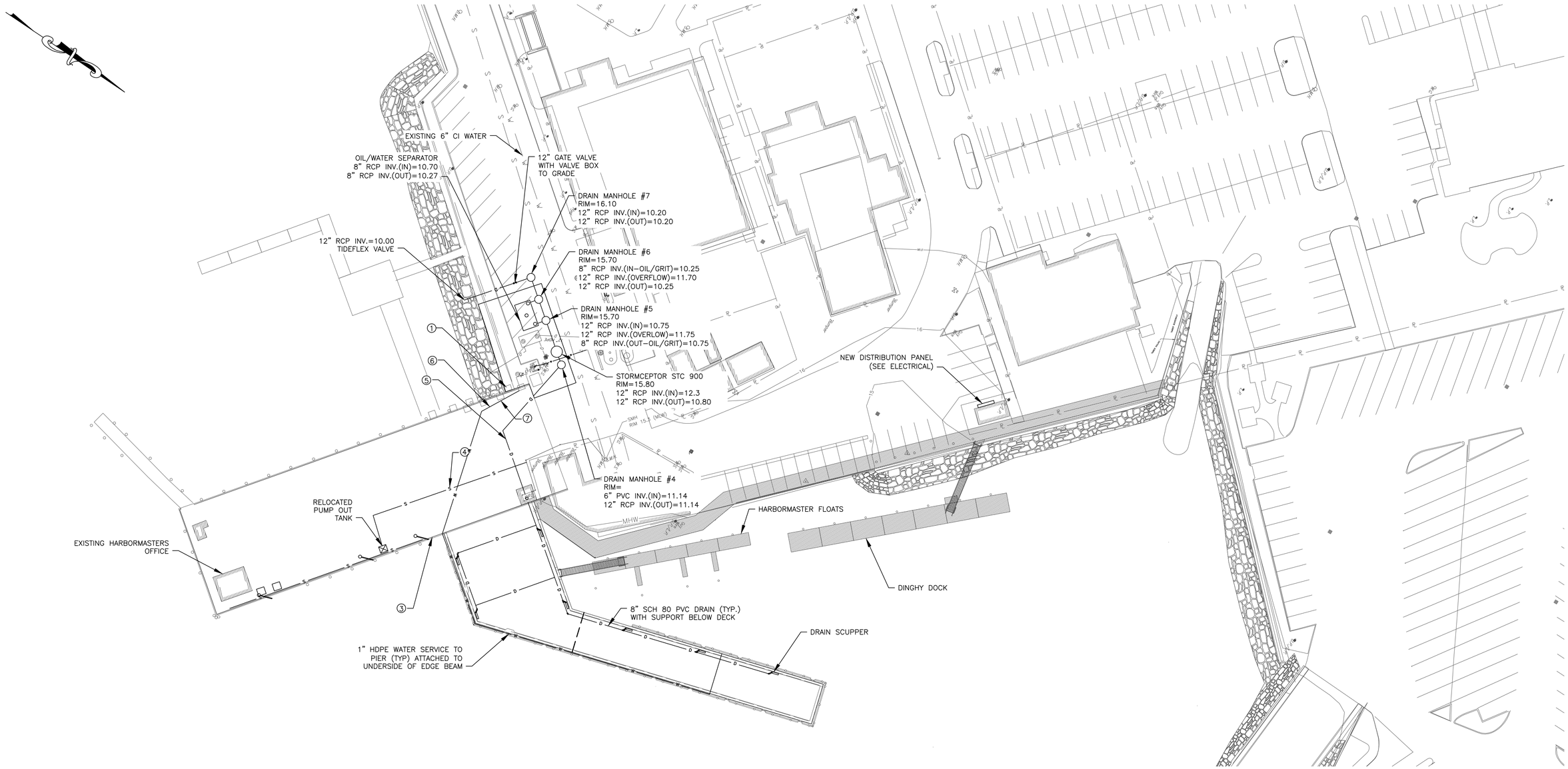

LEGEND:

1. CONTRACTOR SHALL FIELD VERIFY EXISTING GRADES FOR NEW STRUCTURE RIM ELEVATIONS.
2. EXISTING BACKFLOW PREVENTER WITH 1" WATER METER IN ENCLOSURE. CONNECT 1" HDPE SERVICE FOR SOUTH PIER AFTER BACKFLOW PREVENTOR BY CONNECTING INTO EXISTING COPPER TUBING WITH TEE ASSEMBLY WITH TWO BALL VALVES SO THAT EXISTING SERVICE AND PROPOSED SERVICE CAN BE ISOLATED.
3. A. RELOCATED PUMP VACUUM SYSTEM AND ENCLOSURE; MODIFY EXISTING 2" VACUUM PIPE AND DISCHARGE PIPING AS NECESSARY BASED ON NEW LOCATIONS. (BY OTHERS)
   B. ELECTRICAL SERVICE TO NEW PUMP VACUUM SYSTEM. (WORK OF THIS CONTRACT)
4. NEW 2" SDR-11 HDPE DISCHARGE PIPE; CONNECT TO EXISTING 2" DISCHARGE PIPING; CUT AND REMOVE ABANDONED PORTION OF PREVIOUSLY EXISTING DISCHARGE PIPING (TYP.) -BY OTHERS
5. PROVIDE NEW 3"X10" TIMBER UNDER EXISTING PIER AS REQUIRED FOR STORM WATER PIPE ATTACHMENT.
6. 6"X6" PVC TEE WITH THREADED CAP
7. 6"X6" PVC WYE WITH THREADED CAP

RUSSELL J. TITMUSS STRUCTURAL No. 45514 REGISTERED PROFESSIONAL ENGINEER COMMONWEALTH OF MASSACHUSETTS

11/26/14

PIER UTILITY PLAN

WHARF REPLACEMENT PROJECT-PHASE I

TOWN OF PLYMOUTH
PLYMOUTH, MA
NOVEMBER 2014

0 30 60
SCALE: 1"=30'-0"

REVISIONS

Bourne Consulting Engineering, PC
3 Bent Street
Franklin, MA 02038
TEL. (508) 533-8666 FAX. (508) 533-0600

DRAWN: JSF
CHECKED: RJT
APPROVED: RJT
DATE: 11/26/14

DRAWING NO. 34032-01-16
SHEET 16 OF 27

File: X:\34946-\34032 PLYMOUTH T WHARF PHASE I\FINAL DESIGN\SHT-16 PIER UTILITY PLAN.DWG - 11/12/2012 1:02 PM

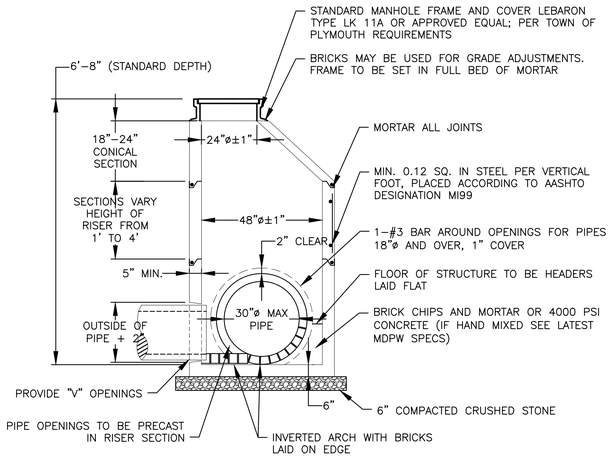

MANHOLE DETAIL

A / 17

SCALE: N.T.S.

NOTES:
1. MANHOLE DESIGN TO CONFORM TO ASTM C478 LATEST REVISION.
2. CONCRETE SHALL BE WET CAST 4000 P.S.I. @ 28 DAYS.
3. USE FLAT TOP SLAB WHEN HEIGHT OF CONE SECTION IS LESS THAN 3'-0"
4. FILL OUTSIDE FACE OF ALL MANHOLE JOINTS WITH NON-SHRINK MORTAR.

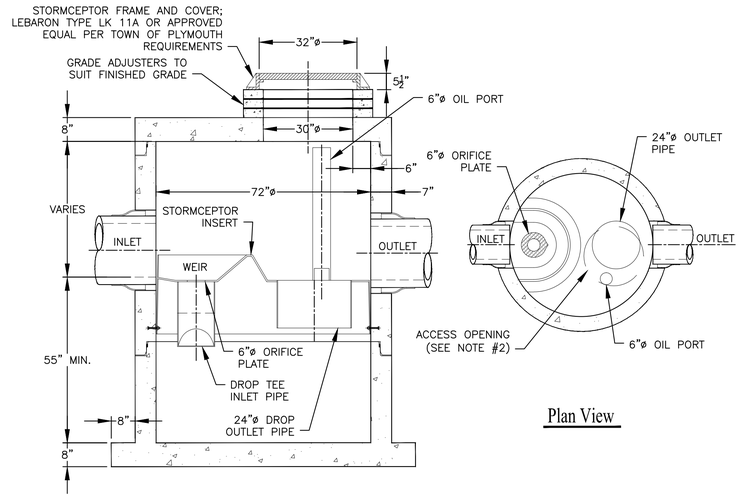

Section Thru Chamber

STC 900 PRECAST STORMCEPTOR

B / 17

SCALE: 1/2"=1'-0"

NOTES:
1. THE USE OF FLEXIBLE CONNECTION IS RECOMMENDED AT THE INLET AND OUTLET WHERE APPLICABLE.
2. THE COVER SHOULD BE POSITIONED OVER THE OUTLET DROP PIPE AND THE OIL PORT.
3. THE STORMCEPTOR SYSTEM IS PROTECTED BY ONE OR MORE OF THE FOLLOWING U.S. PATENTS: #4985148, #5725760, #5753115, #5849181, #6068765, #6371690.
4. CONTACT A CONCRETE PIPE DIVISION REPRESENTATIVE FOR FURTHER DETAILS NOT LISTED ON THIS DRAWING.

DRAINAGE NOTES:

1. ALL CAST IN PLACE CONCRETE TO HAVE A MINIMUM 28 DAY STRENGTH OF 4000 LBS PER SQ. INCH, USING 3/4"MAXIMUM SIZE AGGREGATE.
2. REINFORCING STEEL BARS ARE DEFORMED BARS OF BILLET STEEL ASTM A615 GRADE 60.
3. WELDED WIRE FABRIC CONFORMS TO ASTM A185.
4. CAST IRON FRAME, TYPE "A" AND COVER TYPE "A" FOR DETAILS SEE BWSC DETAILS NOS. F1-D01, F1-D04 AND F1-D05. COVERS TO BE MARKED EITHER "SEWER" OR "DRAIN".
5. DESIGN LIVE LOAD - HS 20 - 44.
6. MINIMUM COVER FOR REINFORCING IN WALLS OR SLABS POURED AGAINST EARTH SHALL BE 3 INCHES. ALL OTHERS SHALL BE 2 INCHES UNLESS OTHERWISE NOTED.
7. ALL MANHOLES SHALL BE CONSTRUCTED OF REINFORCED CONCRETE. SHOP DRAWINGS SUBMITTALS SHALL SHOW ALL REINFORCING DETAILS.

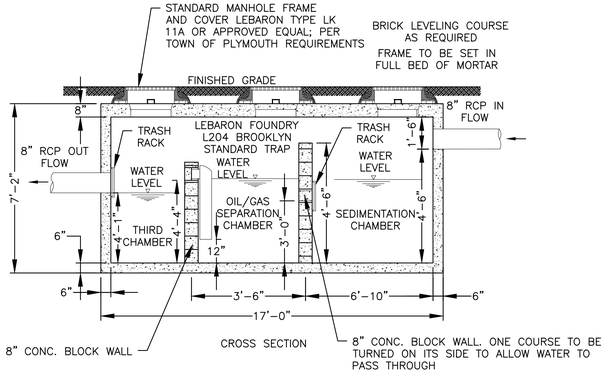

GRIT CHAMBER SPECIFICATIONS:
1. CONCRETE MINIMUM STRENGTH-5000 P.S.I. @ 28 DAYS
2. STEEL REINFORCEMENT-ASTM A-615-75. GRADE 60. 1" MIN. COVER
3. CONSTRUCTION JOINT-SEALED WITH 1"ø BUTYL RUBBER OR EQUIVALENT
4. OIL/WATER CHAMBER CAPACITY = 4,000 GALLONS (MINIMUM)
5. INSIDE WIDTH OF CHAMBER IS 10'-0"

OIL/WATER SEPARATOR

C / 17

SCALE: N.T.S.

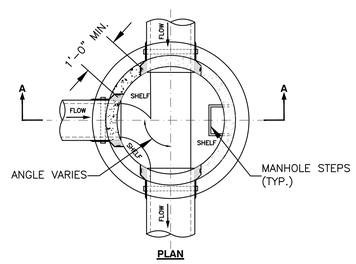

INVERT DETAIL

D / 17

SCALE: 3/8"=1'-0"

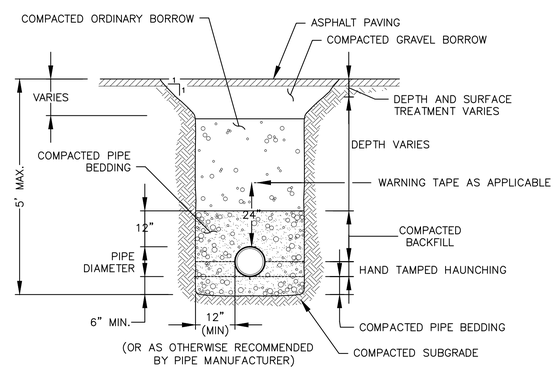

TRENCH DETAIL

E / 17

SCALE: N.T.S.

COMMONWEALTH OF MASSACHUSETTS
RUSSELL J. TITMUSS
STRUCTURAL
No. 46814
REGISTERED PROFESSIONAL ENGINEER

11/26/14

DRAINAGE DETAILS-1

WHARF REPLACEMENT
PROJECT-PHASE I
TOWN OF PLYMOUTH
PLYMOUTH, MA
NOVEMBER 2014

BCE Bourne Consulting Engineering, PC
3 Bent Street
Franklin, MA 02038
TEL. (508) 533-6666 FAX. (508) 533-0600

DRAWN:	JSF
CHECKED:	RJT
APPROVED:	RJT
DATE:	11/26/14

REVISIONS

DRAWING NO. 34032-01-17

SHEET 17 OF 27

File: X:\34946\34032 PLYMOUTH T WHARF PHASE 1\FINAL DESIGN\SHT-17 DRAINAGE DETAILS-1.DWG - 11/12/2012 1:02 PM

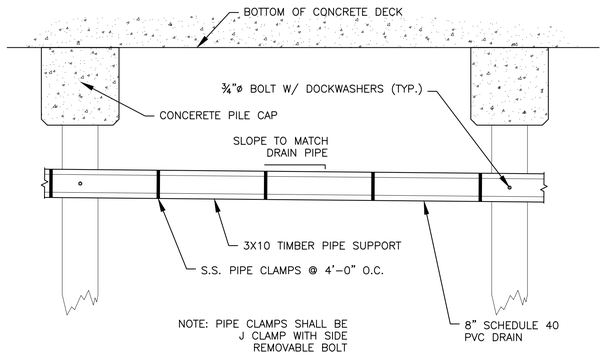

A 18 DRAIN PIPE SUPPORT

SCALE: 1/2"=1'-0"

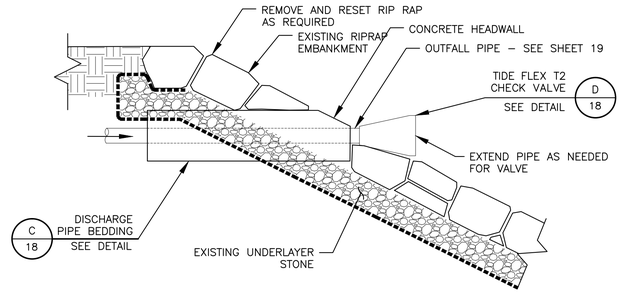

B 18 DRAINAGE DISCHARGE PIPE

SCALE: N.T.S.

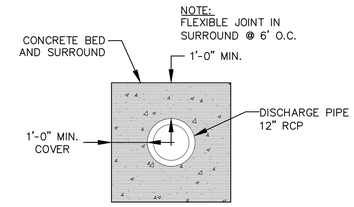

C 18 DISCHARGE PIPE BEDDING

SCALE: 1/2"=1'-0"

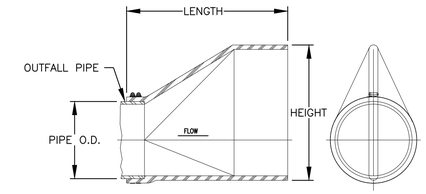

D 18 TIDE FLEX CHECK VALVE

NTS

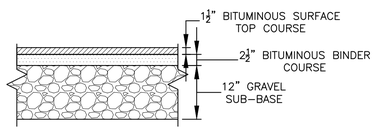

F 18 PAVEMENT DETAILS

SCALE: 3/4"=1'-0"

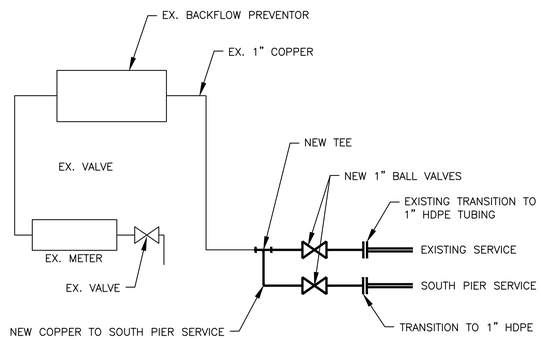

G 18 SOUTH PIER – WATER SERVICE SCHEMATIC DETAIL

SCALE: N.T.S.

COMMONWEALTH OF MASSACHUSETTS
RUSSELL J. TITMUSS
STRUCTURAL
No. 46514
REGISTERED PROFESSIONAL ENGINEER

R J Titmuss
11/26/14

DRAINAGE & WATER DETAILS–2

WHARF REPLACEMENT PROJECT–PHASE I

TOWN OF PLYMOUTH

PLYMOUTH, MA

NOVEMBER 2014

REVISIONS	

BCE Bourne Consulting Engineering PC
3 Beaf Street
Franklin, MA 02038
TEL. (508) 533-6666 FAX. (508) 533-0600

DRAWN: JSF
CHECKED: RJT
APPROVED: RJT
DATE: 11/26/14

DRAWING NO. 34032–01–18

SHEET 18 OF 27

File: X:\34946-\34032 PLYMOUTH T WHARF PHASE 1\FINAL DESIGN\SHT-18 DRAINAGE DETAILS-2.DWG - 11/12/2012 1:02 PM

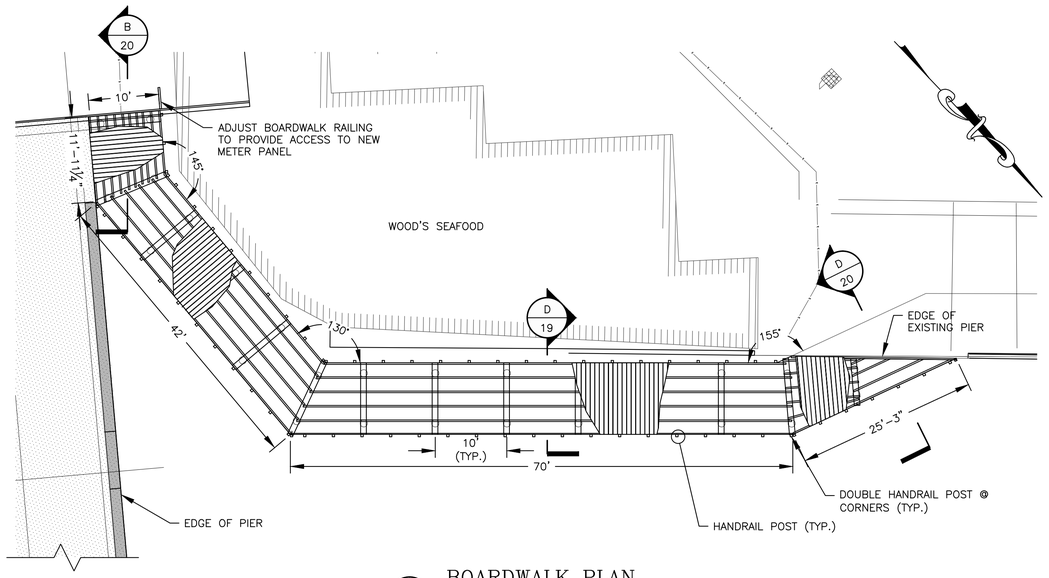

A 19 BOARDWALK PLAN

SCALE: 1"=10'-0"

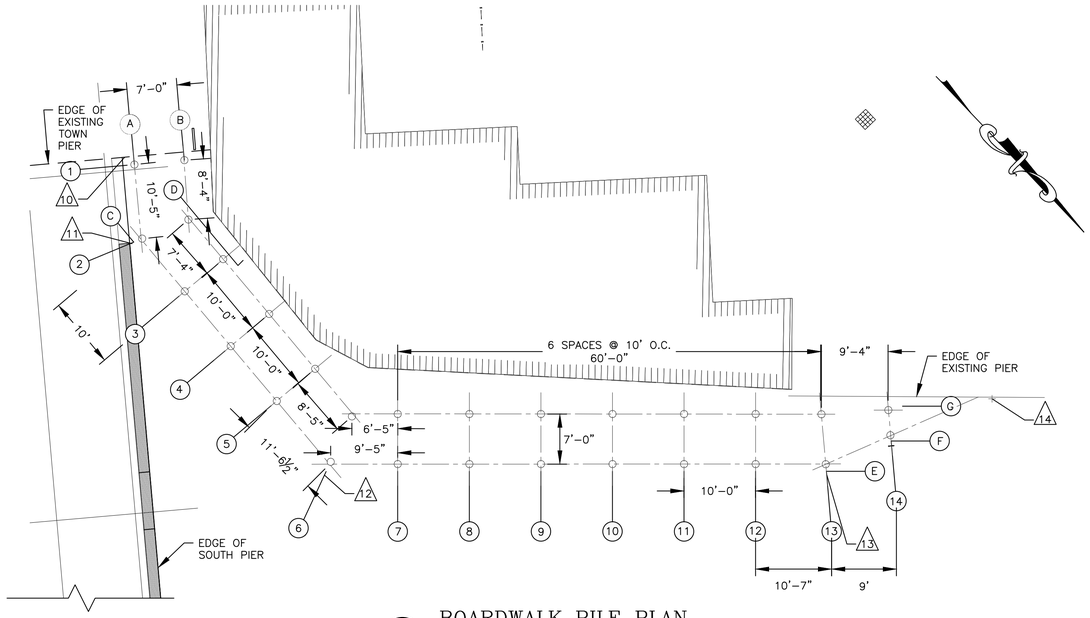

B 19 BOARDWALK PILE PLAN

SCALE: 1"=10'-0"

NOTE:
1. ALL BOARDWALK PILES SHALL BE CCA TREATED.
2. BOARDWALK PILES TO BE DRIVEN TO 10 TON SWL.
3. SLOPE BOARDWALK IF REQUIRED TO MATCH EXISTING GRADES. SLOPE SHALL NOT EXCEED 1:20.
4. SEE SHEET 8 FOR LAYING OUT COORDINATES

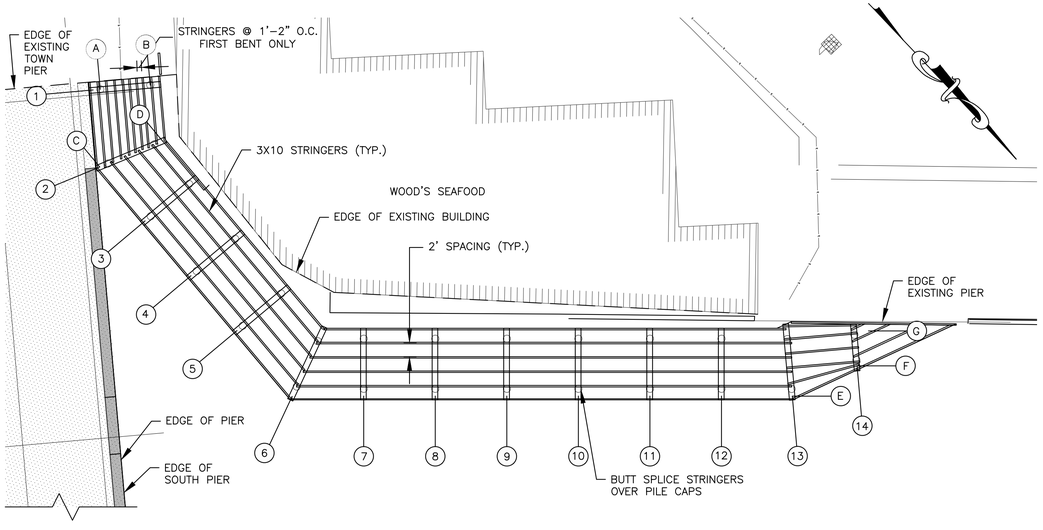

C 19 BOARDWALK PILE CAP & STRINGER PLAN

SCALE: 1"=10'-0"

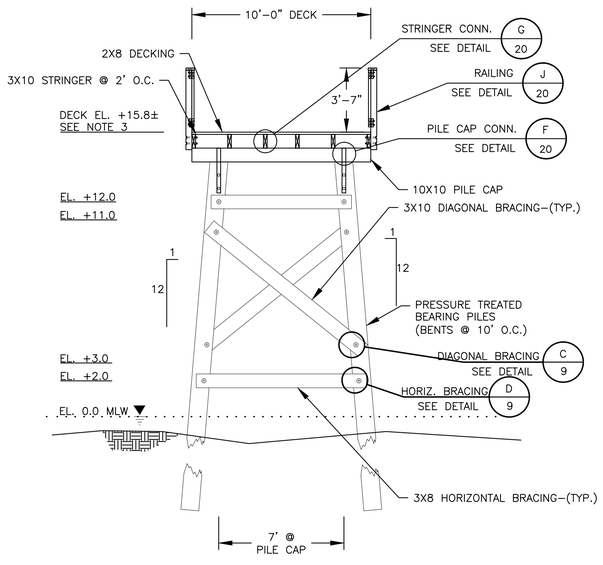

D 19 BOARDWALK SECTION (TYP.)

SCALE: 1/4"=1'-0"

BOARDWALK PLAN & SECTIONS

WHARF REPLACEMENT
PROJECT-PHASE I
TOWN OF PLYMOUTH
PLYMOUTH, MA
NOVEMBER 2014

RUSSELL J. TITMUSS STRUCTURAL No. 46514 REGISTERED PROFESSIONAL ENGINEER COMMONWEALTH OF MASSACHUSETTS

R.J. Titmuss
11/26/14

REVISIONS	

BCE Bourne Consulting Engineering, PC
3 Bent Street
Franklin, MA 02038
TEL. (508) 533-6666 FAX. (508) 533-0600

DRAWN: JSF
CHECKED: RJT
APPROVED: RJT
DATE: 11/26/14

DRAWING NO. 34032-01-19

SHEET 19 OF 27

File: X:\34946\34032 PLYMOUTH T WHARF PHASE 1\FINAL DESIGN\SHT-19 BOARDWALK PLAN.DWG - 11/12/2012 1:02 PM

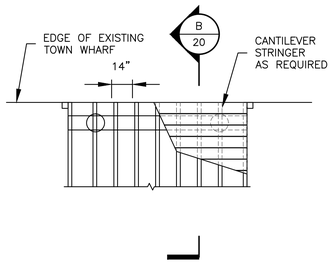

A 20 BOARDWALK SOUTH CONN.–PLAN

SCALE: 1/4"=1'-0"

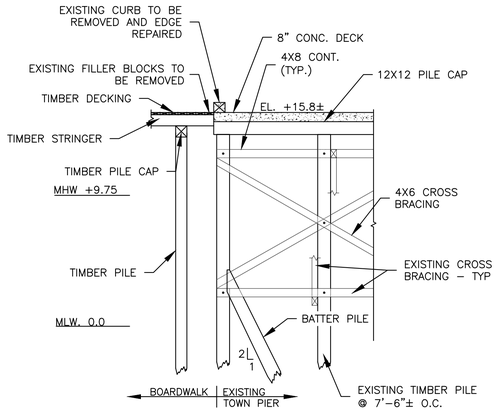

B 20 BOARDWALK SOUTH–SECTION

SCALE: 3/16"=1'-0"

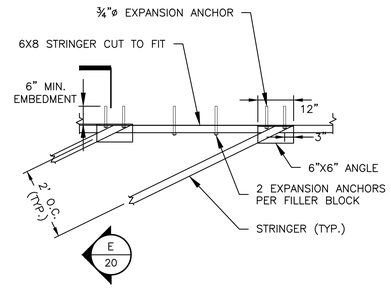

C 20 BOARDWALK NORTH CONN.–PLAN

SCALE: 1/2"=1'-0"

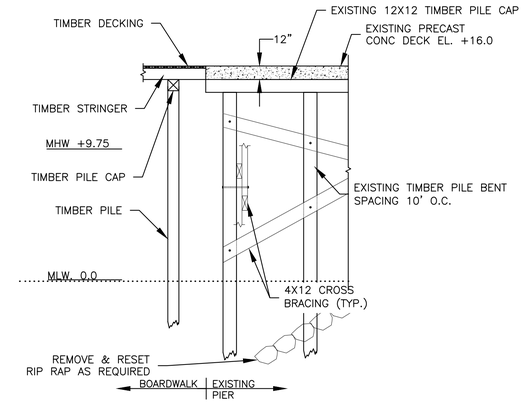

D 20 BOARDWALK NORTH–SECTION

SCALE: 3/16"=1'-0"

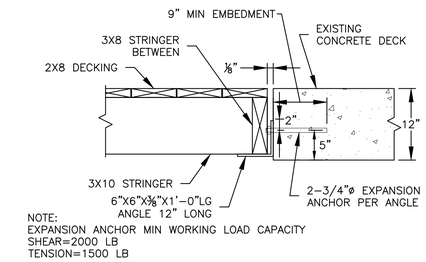

E 20 BOARDWALK TO PIER CONNECTION (NORTH)

SCALE: 1"=1'-0"

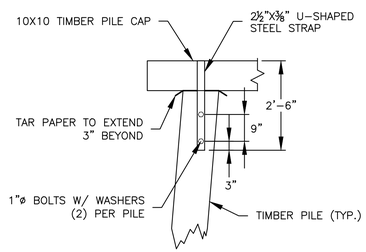

F 20 PILE CAP CONNECTION

SCALE: 1/2"=1'-0"

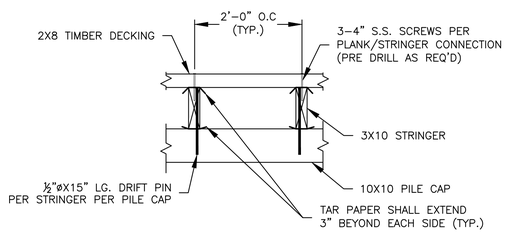

G 20 STRINGER/DECKING CONN.

SCALE: 3/4"=1'-0"

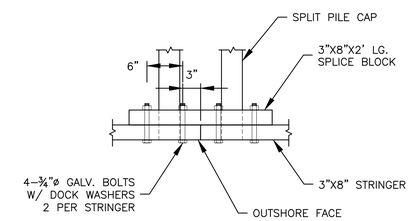

H 20 EDGE STRINGER SPLICE DETAIL

SCALE: 1"=1'-0"

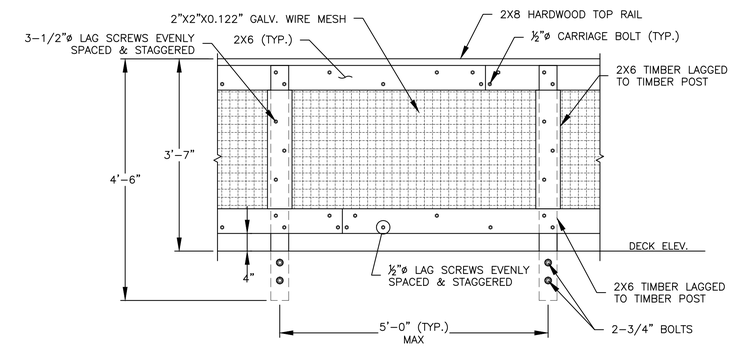

I 20 RAILING ELEVATION

SCALE: 3/4"=1'-0"

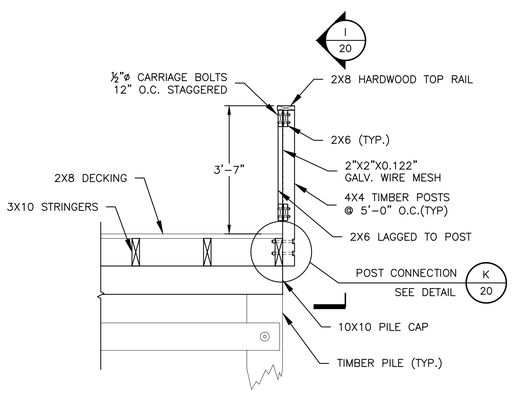

J 20 RAILING DETAIL

SCALE: 1/2"=1'-0"

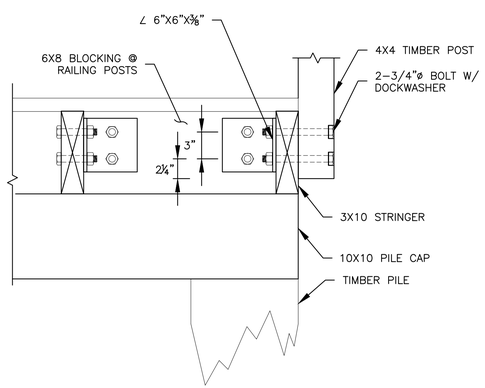

K 20 POST CONNECTION DETAIL

SCALE: 1/4"=1'-0"

11/26/14

BOARDWALK DETAILS

WHARF REPLACEMENT
PROJECT–PHASE I
TOWN OF PLYMOUTH
PLYMOUTH, MA
NOVEMBER 2014

BCE Bourne Consulting Engineering, PC
3 Bent Street
Franklin, MA 02038
TEL. (508) 533-6666 FAX. (508) 533-0600

DRAWN:	JSF
CHECKED:	RJT
APPROVED:	RJT
DATE:	11/26/14

REVISIONS

DRAWING NO. 34032-01-20

SHEET 20 OF 27

File: X:\34946-\34032 PLYMOUTH 1 WHARF PHASE 1\FINAL DESIGN\SHT-20 BOARDWALK DETAILS.DWG - 11/12/2012 1:02 PM

WARNING

ARC FLASH AND SHOCK HAZARD
APPROPRIATE PPE REQUIRED

TYPICAL FLASH PROTECTION WARNING LABEL

PROVIDE ON ALL IN-LINE METER SOCKETS, SWITCHBOARDS, DISTRIBUTION PANELS, PANELBOARDS AND MOTOR CONTROL CENTERS IN ACCORDANCE WITH NEC 110.16.

3⅛"

1½"

PANEL R26C
225A 208Y/120V
FED FROM RD26A

¼" LETTERS (MINIMUM)

TYPICAL NAMEPLATE DETAIL

UTILIZE MECHANICAL FASTENERS FOR ALL EXTERIOR LOCATIONS. TYPICAL FOR "SWITCHBOARDS", "PANELBOARDS", "STARTERS", "DISCONNECTS", AND "TRANSFORMERS".

4½"

3"

IDENTIFICATION OF PHASE AND SYSTEM

480Y/277V		208Y/120V
BROWN	A	BLACK
ORANGE	B	RED
YELLOW	C	BLUE
GRAY	N	WHITE

¼" LETTERS (MINIMUM)

TYPICAL PANELBOARD CONDUCTOR NAMEPLATE DETAIL

TYPICAL FOR MOUNTING TO ALL DISTRIBUTION EQUIPMENT (SWITCHGEAR, SWITCHBOARDS, PANELBOARDS, ETC.)

GENERAL NOTES:
1. REFER TO SPECIFICATIONS FOR ADDITIONAL NAMEPLATE REQUIREMENTS.
2. NAMEPLATE TO BE 1/16" THICK PLASTIC WITH BLACK CENTER LAMINATION. FACE SHALL BE WHITE, ENGRAVED LETTERS SHALL BE BLACK.
3. SECURE NAMEPLATE TO SURFACES WITH HIGH STRENGTH ADHESIVE CEMENT.

RDK TYPICAL NAMEPLATES DETAIL E303C

ABBREVIATIONS

A/AMP	AMPERE	KWH	KILOWATT HOURS
AC	ALTERNATING CURRENT	LTG	LIGHTING
ADA	AMERICAN WITH DISABILITIES ACT	MCB	MAIN CIRCUIT BREAKER
AF	AMPERE FRAME	MEC	MASSACHUSETTS ELECTRICAL CODE
AFF	ABOVE FINISHED FLOOR	M/G	MOTOR/GENERATOR SET
AFG	ABOVE FINISHED GRADE	MH	MANHOLE
AIC	AMPERE INTERRUPTING CAPACITY	MLO	MAIN LUGS ONLY
AL	ALUMINUM	MTD	MOUNTED
AT	AMPERE TRIP	MTG	MOUNTING
ATS	AUTOMATIC TRANSFER SWITCH	NC	NORMALLY CLOSED CONTACT
AWG	AMERICAN WIRE GAUGE	NEC	NATIONAL ELECTRICAL CODE
B	BURIED	NO	NORMALLY OPEN CONTACT
C	CONDUIT	NTS	NOT TO SCALE
CA	CABLE	#	NUMBER
CATV	CABLE TELEVISION	OPD	OVER CURRENT PROTECTION DEVICE
CCTV	CLOSED CIRCUIT TELEVISION SYSTEM	POS	PROVIDED UNDER OTHER SECTIONS
CB	CIRCUIT BREAKER	PVC	POLYVINYL CHLORIDE
CKT	CIRCUITS	PWR	POWER
CPU	CENTRAL PROCESSING UNIT	RGS	RIGID GALVANIZED STEEL
℄	CENTERLINE	RMS	ROOT MEAN SQUARE VALUE
dB	DECIBEL	RPM	REVOLUTIONS PER MINUTE
DC	DIRECT CURRENT	SN	SOLID NEUTRAL
DWG	DRAWING	SWBD	SWITCHBOARD
EC	ELECTRICAL CONTRACTOR	TB	TERMINAL BLOCK
EMT	ELECTRIC METALLIC TUBING	TEL	TELEPHONE
FDR	FEEDER	TERMN	TERMINAL
FLMT	FLEXIBLE LIQUID TIGHT METALLIC TUBING	TSP	TWISTED SHIELDED-PAIR
FREQ	FREQUENCY	TVSS	TRANSIENT VOLTAGE SURGE SUPPRESSER
GEC	GROUNDING ELECTRODE CONDUCTOR	TYP	TYPICAL
GFI	GROUND FAULT INTERRUPTING	UG	UNDERGROUND
GND	GROUND	UNO	UNLESS NOTED OTHERWISE
HH	HANDHOLE	UPS	UNINTERRUPTIBLE POWER SUPPLY
HP	HORSEPOWER	UTP	UNSHIELDED TWISTED-PAIR
HVAC	HEATING, VENTILATING AND AIR CONDITIONING	V	VOLTS
HZ	HERTZ	VA	VOLT-AMPERE
IG	ISOLATED GROUND	VSD	VARIABLE SPEED DRIVE
JB	JUNCTION BOX	W	WATTS
KVA	KILOVOLT-AMPERE	WP	WEATHERPROOF
KW	KILOWATT		

POWER DISTRIBUTION

- 208Y/120 VOLT PANELBOARD, SURFACE MOUNTED REFER TO SCHEDULE OF PANELBOARDS
- 480Y/277 VOLT PANELBOARD, SURFACE MOUNTED REFER TO SCHEDULE OF PANELBOARDS
- GROUND BAR
- KT3 — DRY TYPE TRANSFORMER K-RATED "KT3" - INDICATES KVA RATING OF TRANSFORMER REFER TO DRY TYPE K-RATED TRANSFORMER SCHEDULE
- CT — CURRENT TRANSFORMER CABINET
- M — CUSTOMER METER
- M — UTILITY METER AND SOCKET
- 60AS/60AF — FUSED DISCONNECT SWITCH, 3-POLE, IN NEMA TYPE 1 ENCLOSURE, UNLESS OTHERWISE NOTED. "3R" - INDICATES NEMA TYPE 3R ENCLOSURE "60AS" - INDICATES 60AMP SWITCH "50AF" - INDICATES 50AMP FUSES
- FB-4 / 7.5KW — EQUIPMENT TAG, TOP ALPHANUMERIC CORRESPONDS TO EQUIPMENT ID LOWER INDICATES LOAD (KW, HP, ETC.)

BUILDING GROUNDING GRID LEGEND

- GROUND ROD
- G — GROUNDING CABLE
- EXOTHERMIC BONDING CONNECTION
- BOLTED BONDING CONNECTION

LIGHTING FIXTURE LEGEND

- HG1 / HG4 — POLE MOUNTED LIGHTING FIXTURE

SITE LEGEND

- CABLE TO GROUND CONNECTION
- 3/4" x 10'-0" COPPER CLAD GROUND ROD
- CABLE TO CABLE CONNECTION
- EM — ELECTRIC MANHOLE
- TM — TELEPHONE MANHOLE
- EH — ELECTRIC HAND HOLE
- TH — TELEPHONE HAND HOLE
- G — GROUND CABLE
- UE — UNDERGROUND ELECTRIC
- UT — UNDERGROUND TELEPHONE
- OE — OVERHEAD ELECTRIC
- OT — OVERHEAD TELEPHONE
- A / # — UNDERGROUND SECTION, REFER TO SECTION DETAIL "A" INDICATES DETAIL LETTER "#" INDICATES DRAWING NUMBER

BRANCH CIRCUIT & FEEDER LEGEND

- BRANCH CIRCUIT OR FEEDER CONCEALED IN FINISHED AREAS
- BRANCH CIRCUIT OR FEEDER, CONCEALED IN OR UNDER FLOOR SLAB
- BRANCH CIRCUIT OR FEEDER TURNING UP TOWARDS OBSERVER
- BRANCH CIRCUIT OR FEEDER TURNING DOWN AWAY FROM OBSERVER
- CONDUIT STUBBED ABOVE CEILING
- R22A-1,3,5 — BRANCH CIRCUIT HOME RUN TICKS INDICATE QUANTITY OF CONDUCTORS, GROUND CONDUCTORS ARE NOT INDICATED. NO TICKS INDICATES 2#12 & 1#12G IN 3/4"C MINIMUM. R22A-1,3,5 INDICATES PANEL AND CIRCUIT DESIGNATION FROM WHICH HOMERUN SHALL ORIGINATE. EACH CIRCUIT SHALL BE 20A-1P (20AMP SINGLE POLE) UNLESS NOTED OTHERWISE.
- H42B-1 100A-3P / 6 — FEEDER HOMERUN. REFER TO LEGEND OF FEEDER SIZES FOR CONDUCTOR AND RACEWAY REQUIREMENTS DESIGNATED INSIDE TAG. H42B-1 INDICATES PANEL AND CIRCUIT NUMBER DESIGNATION FROM WHICH HOME RUN SHALL ORIGINATE, 100A-3P INDICATES 100 AMPERE, 3 POLE CIRCUIT BREAKER.
- FLEXIBLE CONNECTION TO EQUIPMENT. RACEWAY AND CONDUCTOR RATING TO MATCH ASSOCIATED BRANCH CIRCUIT OR FEEDER
- E — BRANCH CIRCUIT FOR EMERGENCY BATTERY DC CIRCUIT, MINIMUM 2#10 IN 3/4"C. UNLESS OTHERWISE NOTED

WIRING DEVICE LEGEND

- 5 GFI — DUPLEX RECEPTACLE, GROUNDING TYPE, RATED 20A, 125V "5"- INDICATES CIRCUIT NUMBER "GFI"- INDICATES INTEGRAL GROUND FAULT CIRCUIT INTERRUPTER "IG"- INDICATES ISOLATED GROUND TYPE "WP" - INDICATES WEATHERPROOF "SP" - INDICATES SURGE PROTECTION "T" - INDICATES TAMPER RESISTANT SAFETY "C" - INDICATES COUNTER HEIGHT
- DOUBLE DUPLEX RECEPTACLE, GROUNDING TYPE, RATED 20A, 125V
- 15 — SPECIAL PURPOSE RECEPTACLE, "15" - INDICATES TAG NUMBER REFER TO SPECIAL PURPOSE RECEPTACLE SCHEDULE
- J — JUNCTION BOX
- PB — PULLBOX

LIGHTING FIXTURE SCHEDULE

TAG	MANUFACTURER	CATALOG NUMBER	DESCRIPTION	LAMPS TYPE	LAMPS LUMENS	LAMPS COLOR	INPUT VOLTS	INPUT WATTS	REMARKS
L1	LITHONIA	OLVTWM	LED VAPORTIGHT	LED	600	4000K	120V	15	OR APPROVED EQUAL
S2	CREE	STR-LWY-2M-HT-12-E-UL-SV-525-40K	LED DIRECT ARM MOUNT ROADWAY LUMINAIRE WITH BIRD SPIKES AND 25' ROUND TAPERED ALUMINUM POLE AND 8' MOUNT ARM	LED	17,416	4000K	208V	197W	OR APPROVED EQUAL
	COOPER	NAV-AE-06-E-UNV-T2-10K-AI-AP-530						159W	OR APPROVED EQUAL
S4	CREE	STR-LWY-3M-HT-12-E-UL-SV-525-40K	LED DIRECT ARM MOUNT ROADWAY LUMINAIRE WITH BIRD SPIKES AND 25' ROUND TAPERED ALUMINUM POLE AND 8' MOUNT ARM	LED	17,880	4000K	208V	197W	OR APPROVED EQUAL
	COOPER	NAV-AE-06-E-UNV-T3-10K-AI-AP-530						159W	OR APPROVED EQUAL
S5	CREE	STR-LWY-4M-HT-12-E-UL-SV-525-40K	LED DIRECT ARM MOUNT ROADWAY LUMINAIRE WITH BIRS SPIKES AND 25' ROUND TAPERED ALUMINUM POLE AND 8' MOUNT ARM	LED	18,809	4000K	208V	197W	OR APPROVED EQUAL
	COOPER	NAV-AE-06-E-UNV-T4FT-10K-AI-AP-530						159W	OR APPROVED EQUAL
FL	CREE	FLD-EHO-70-HV-24-E-UL-SV-700-40K; EHO-UNV (DIRECT MOUNT BRACKET);	HIGH OUTPUT LED FLOOD WITH 70° BEAM SPREAD, BIRD SPIKES AND MOUNTING BRACKET	LED	48,654	4000K	208V	533W	OR APPROVED EQUAL

NOTES: (APPLY TO ALL APPLICABLE LIGHTING FIXTURES. THE REMARKS COLUMN SHALL NOTE ADDITIONAL REQUIREMENTS.)

1. FIXTURES SPECIFIED WITH CATALOG NUMBERS ESTABLISH QUALITY LEVEL FOR EQUAL FIXTURES FROM MANUFACTURERS LISTED WITHOUT CATALOG NUMBERS. WHERE ONLY ONE MANUFACTURER LISTED, THERE SHALL BE NO SUBSTITUTION.
2. VERIFY EXACT MOUNTING CONDITIONS AND PROVIDE APPROPRIATE ACCESSORIES AND HARDWARE TO ACCOMMODATE REQUIREMENTS. PROVIDE 25' ROUND TAPERED ALUMINUM POLE SUITABLE FOR SPECIFIED LUMINAIRE(S') EPA AND LOCAL WIND CONDITIONS, VALMONT TYPE RTA, WITH 8' ALUMINUM ELLIPTICAL MAST ARM, OR APPROVED EQUAL.
3. PROVIDE EACH WITH 15 AMP IN-LINE FUSING AT POLE BASE.

PANELBOARD SCHEDULE

PANEL: "MDP" — MAIN: 400A-3P MCB (SE RATED) — VOLTS: 208Y/120 — AMPS: 400 — PH/WIRE: 3/4 — MOUNT: SURFACE — AIC: 22K — LOC.: CABINET — GROUND BUS: YES — NEMA 3R: YES — 200% NEUTRAL: NO

CIR.	AMPS/ POLES	DESCRIPTION OF LOAD	LOAD kVA	A	B	C	LOAD kVA	DESCRIPTION OF LOAD	AMPS/ POLES	CIR.
1	20A-2P	SITE LIGHTING	0.86	0.86			0.00	SPACE		2
3			0.86		0.86		0.00	SPACE		4
5	20A-2P	SITE LIGHTING	0.20			0.20	0.00	SPACE		6
7			0.20	0.20			0.00	SPACE		8
9	20A-2P	SPARE	0.00		0.00		0.00	SPACE		10
11			0.00			0.00	0.00	SPACE		12
P-2	20A-2P	SPARE	0.00	0.00			0.00	SPACE		14
15			0.00		0.00		0.00	SPACE		16
17	20A-2P	SPARE	0.00			0.00	0.00	SPACE		18
19			0.00	0.00			0.00	SPACE		20
21	20A-1P	ENCLOSURE GFI & LTG	0.46		0.46		0.00	SPACE		22
23	20A-1P	SPARE	0.00			0.00	0.00	SPACE		24
25	20A-1P	SPARE	0.00	0.00			0.00	SPACE		26
27	20A-1P	SPARE	0.00		0.00		0.00	SPACE		28
29	20A-1P	SPARE	0.00			0.00	0.00	SPACE		30
31	20A-2P	⟨1⟩ PIER LIGTHTING RE-FEED	0.00	0.00			0.00	SPACE		32
33			0.00		0.00		0.00	SPACE		34
35	60A-2P	MARINA POWER PEDESTALS	5.18			5.18	0.00	SPACE		36
37			5.18	5.18			0.00	SPARE	100A-3P	38
39	60A-2P	MARINA POWER PEDESTALS	5.18		5.18		0.00			40
41			5.18			5.18	0.00			42
		CONNECTED kVA BY PHASE -		6.24	6.50	10.57		TOTAL CONNECTED KVA-	23.31	
								DEMAND FACTOR	1.00	
								TOTAL DEMAND KVA-	23.31	
								TOTAL DEMAND AMPERES-	64.69	

KEY NOTE:

⟨1⟩ VERIFY ACTUAL SERVICE CONFIGURATION IN THE FIELD. PROVIDE BRANCH CIRCUIT BREAKER AND BRANCH CIRCUIT TO MATCH EXISTING SERVICES AND TO COMPLY WITH THE NEC.

ELECTRICAL LEGEND, NOTES & ABBREVIATIONS

WHARF REPLACEMENT PROJECT
TOWN OF PLYMOUTH
PLYMOUTH, MA
NOVEMBER 2014

COMMONWEALTH OF MASSACHUSETTS
DAVID J. COURTEMANCHE
ELECTRICAL
No. 30175
REGISTERED PROFESSIONAL ENGINEER

RDK ENGINEERS
Andover, MA - Boston, MA - Amherst, MA
Durham, NC - Charlotte, NC
70 Fargo Street Boston, MA 02210-1964
T.617-345-9885

BCE Bourne Consulting Engineering, PC
3 Bent Street
Franklin, MA 02038
TEL. (508) 533-6666 FAX. (508) 533-0600

RDK PROJECT NO. 20140616

REVISIONS

DRAWN:
CHECKED:
APPROVED:
DATE: 11/25/14

DRAWING NO. 30780-01-E000

Q:\2014\20140616 - Plymouth Town Wharf Electrical Engineering\1200 Drawings\1204 Electrical\20140616 E000 ELECTRICAL LEGEND, NOTES & ABBREVIATIONS.dwg [24x36] November 26, 2014 - 9:33am szhen

POWER NOTES:

1. REFER TO DRAWING E000 FOR LEGEND, SYMBOLS AND GENERAL NOTES.
2. REFER TO STRUCTURAL ENGINEERING DRAWINGS FOR ASSOCIATED NOTES, MOUNTING DETAILS, HEIGHTS AND EXACT LOCATIONS OF ALL DEVICES.
3. CONDUIT ROUTES AND CIRCUIT NUMBERS ARE DIAGRAMMATIC. EXACT ROUTING AND NUMBERS SHALL BE DETERMINED IN THE FIELD AND REFLECTED ON AS-BUILT DOCUMENTATION BY THE ELECTRICAL CONTRACTOR. THE ASSOCIATED CIRCUIT NUMBERS THAT ARE APPLIED TO EACH DEVICE AND PIECE OF EQUIPMENT INFERS INTERCONNECTING BRANCH CIRCUITRY. INTERCONNECTING BRANCH WIRING SHALL BE SIZED EQUAL TO THE HOMERUN UNLESS NOTED OTHERWISE.
4. VOLTAGE DROP HAS BEEN CONSIDERED IN THE DESIGN OF ALL BRANCH CIRCUITRY AND FEEDER SIZES BASED UPON THE ILLUSTRATED EQUIPMENT LAYOUTS AND SHORTEST CONDUCTOR/RACEWAY ROUTING. THE ELECTRICAL CONTRACTOR SHALL BE RESPONSIBLE FOR DEVIATIONS TAKEN THAT WILL INCREASE CONDUCTOR/RACEWAY ROUTING LENGTHS. BRANCH CIRCUITS LONGER THAN 75' FOR 120V FROM PANEL TO LAST OUTLET SHALL BE INCREASED A MINIMUM OF ONE SIZE ABOVE THAT SPECIFIED TO LIMIT VOLTAGE DROP TO LESS THAN 3%. FEEDERS SHALL FOLLOW SIMILAR GUIDELINES AND BE LIMITED TO 2% DROP.
5. REFER TO ELECTRICAL DEMOLITION PLAN, DRAWING ED01, FOR DEMOLITION SCOPE.
6. ALL EXISTING OVERHEAD UTILITIES SHALL BE RELOCATED TO NEW UNDERGROUND DISTRIBUTION. ELECTRICAL CONTRACTOR SHALL COORDINATE WITH APPROPRIATE UTILITY COMPANIES (VERIZON, COMCAST, TOWN OF PLYMOUTH FIBER, ETC.) TO ORCHESTRATE INSTALLATION OF NEW COMMUNICATIONS SERVICES AT EACH CUSTOMER STRUCTURE AND DEMOLITION OF EXISTING OVERHEAD LINES, ASSOCIATED TERMINAL BOXES, WIRES, ETC. PROVIDE CONDUIT SIZE(S) PER UTILITY COMPANY SPECIFICATIONS. COORDINATE ALL WORK WITH UTILITIES AND CUSTOMERS TO LIMIT CUSTOMER DOWN TIME TO ONE (1) OUTAGE, WHICH SHALL NOT EXCEED 3 HOURS. COORDINATE WITH NSTAR FOR ELECTRICAL DEMOLITION AND NEW SERVICE CHANGEOVERS. REFER TO ELECTRICAL DEMOLITION PLAN.
7. RUN ALL CONDUIT INSIDE OF CONCRETE CURB INTEGRAL TO CONCRETE PIER. COORDINATE CONDUIT SIZE AND INSTALLATION REQUIREMENTS, WITH G.C. PRIOR TO WORK.
8. RUN CONDUIT TIGHT TO BOTTOM OF CONCRETE DECK WHEN CROSSING UNDERSIDE OF CONCRETE PIER.
9. TRANSITION TO TYPE LFNC CONDUIT WHERE TRANSITIONING FROM BOARDWALK TO PIER AND VICE VERSA TO ALLOW FOR MOVEMENT.

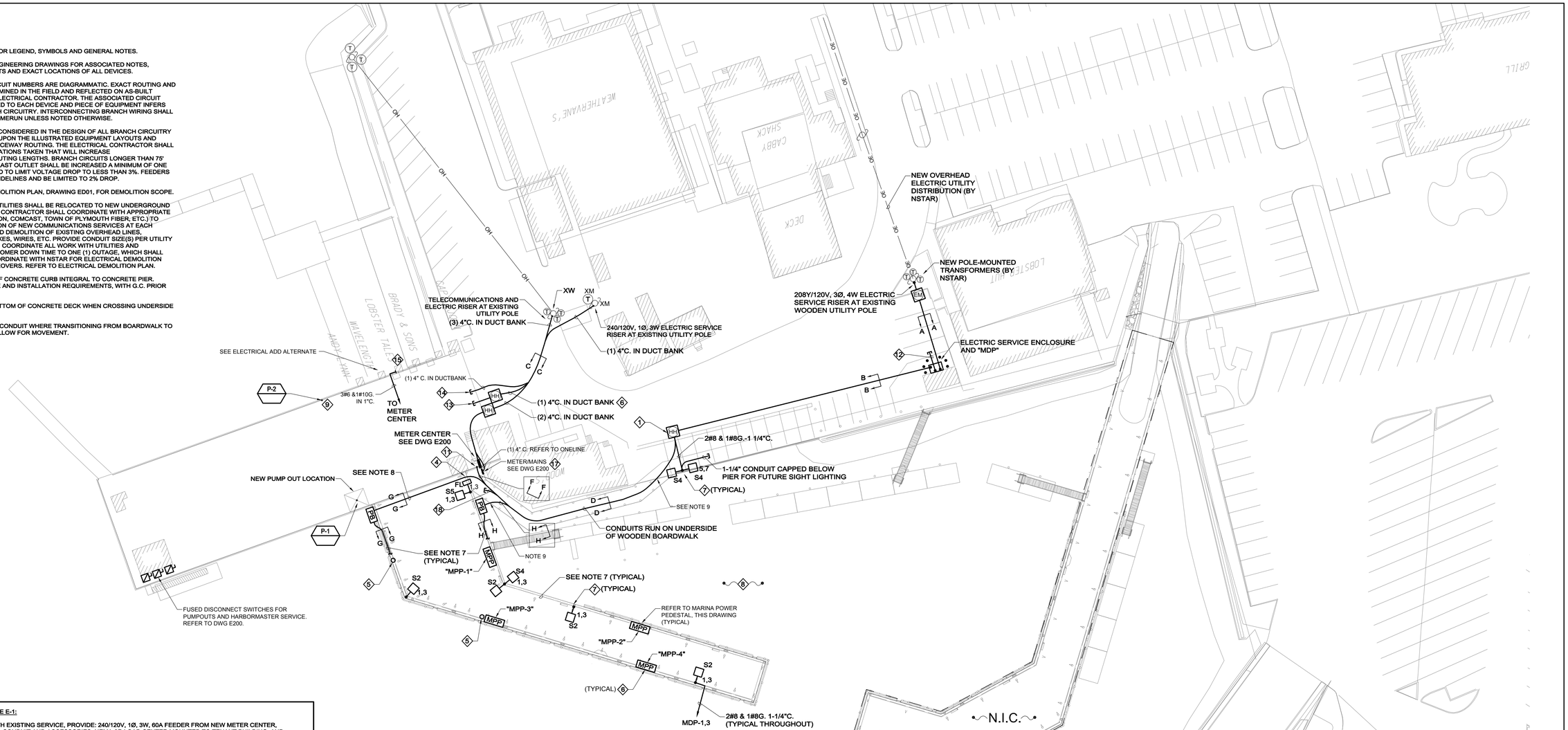

ELECTRICAL SITE PLAN

ELECTRICAL ADD ALTERNATE E-1:

FOR EACH PIER TENANT WITH EXISTING SERVICE, PROVIDE: 240/120V, 1Ø, 3W, 60A FEEDER FROM NEW METER CENTER, INCLUDING ALL ASSOCIATED CONDUIT AND ACCESSORIES, NEMA-3R LOAD CENTER MOUNTED TO TENANT BUILDING, AND BRANCH CIRCUIT BREAKERS TO RE-FEED EXISTING TENANT LOADS.

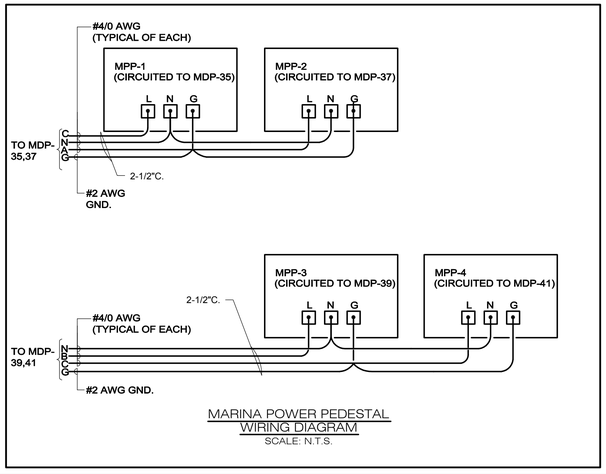

MARINA POWER PEDESTAL WIRING DIAGRAM
SCALE: N.T.S.

KEY NOTES:

1. PROVIDE SLEEVING AT EXISTING BULKHEAD. TRANSITION TO RGS FROM HANDHOLE THROUGH BULKHEAD. TRANSITIM TO SCHEDULE 80 PVC UNDER WOODEN BOARDWALK. PROVIDE LFNC AS REQUIRED AT TRANSITIONS TO ACCOMMODATE CONDUIT ROUTING AND DIFFERENTIAL SETTLEMENT.
2. ELECTRICAL CONTRACTOR SHALL REPLACE EXISTING METER BANK WITH A NEW MODULAR METER CENTER AND REWORK ALL ASSOCIATED CONDUITS TO PROVIDE ADDITIONAL CLEARANCE FOR PEDESTRIAN TRAVEL. SEE POWER RISER DIAGRAM FOR ADDITIONAL INFORMATION.
3. ELECTRICAL CONTRACTOR SHALL PROVIDE PERMANENT CONDUIT MARKER FOR CONTINUATION BY OTHERS IN THE FUTURE.
4. TRANSITION TO TYPE LFNC FROM BOARDWALK TO HANDHOLE TO ALLOW FLEXIBILITY.
5. PROVIDE (1) 2-1/2" CONDUIT WITH PULLSTRING FROM ELECTRIC SERVICE ENCLOSURE STUBBED AND CAPPED BELOW CONCRETE PIER AT THIS LOCATION FOR FUTURE JIB CRANE POWER.
6. PROVIDE 5" CONDUIT WITH (3) 1-1/2" HDPE SMOOTH WALL INNERDUCT AND PULLSTRINGS FROM RISER THROUGH HANDHOLE AND BULKHEAD.
7. SITE LIGHTING POLE BASE LOCATED ON THE FIXED PIERS SHALL EXTEND 3'-0" ABOVE FINISHED GRADE. POLE BASES ALONG THE WALKING PATHS SHALL EXTEND 3" ABOVE FINISHED GRADE. REFER TO SITE LIGHTING POLE BASE DETAIL ES014 ON DRAWING E-4 FOR ADDITIONAL INFORMATION.
8. ELECTRICAL CONTRACTOR SHALL DEMOLISH ALL EXISTING ELECTRICAL SYSTEMS ON THE EXISTING T-WHARF, BACK TO THE SOURCE, INCLUDING ALL WOODEN UTILITY POLES, OVERHEAD ELECTRIC DISTRIBUTION, CONDUIT AND CONDUCTORS.
9. INTERCEPT EXISTING CIRCUIT FEEDING PUMP OUT ON FLOATS. RE-FEED AS NOTED ON DWG E200.
10. REFER TO MARINA POWER PEDESTAL WIRING DIAGRAM THIS DRAWING.
11. RE-FEED EXISTING TOWN WHARF LIGHTING CIRCUIT FROM NEW "MDP". REFER TO DRAWING E200 FOR MORE INFORMATION.
12. PROVIDE (3) 2-1/2" AND (3) 1-1/4" CAPPED CONDUITS STUBBED FROM INSIDE ELECTRICAL ENCLOSURE TO BEYOND ENCLOSURE PAD, UNDERGROUND, FOR FUTURE USE. PROVIDE CONCRETE CONDUIT MARKER INDICATING LOCATION OF CAPPED CONDUIT BELOW GRADE.
13. PROVIDE (1) 4" RGS CONDUIT WITH BUSHINGS STUBBED OUT OF BULKHEAD FOR VERIZON.
14. PROVIDE (1) 3" RGS CONDUIT WITH BUSHINGS STUBBED OUT OF BULKHEAD FOR COMCAST AND TOWN FIBER.
15. FOR CUSTOMER METER NUMBER 1983807, PROVIDE NEW 240/120V, 1Ø, 3W, 60A MLO NEMA-3R LOAD CENTER, WITH BRANCH CIRCUIT BREAKERS TO MATCH EXISTING, MOUNTED TO TENANT BUILDING. RE-FEED EXISTING BRANCH CIRCUITS FROM NEW LOAD CENTER. LOAD CENTER SHALL BE FED FROM METER CENTER AS SHOWN ON DWG E200.
16. MARINA POWER PEDESTAL, PER SPECIFICATIONS, WITH WIRELESS METERING. PROVIDE ALL EQUIPMENT, WIRE, CONNECTIONS, SOFTWARE AT HARBORMASTER'S OFFICE, AND PROGRAMMING NECESSARY FOR A COMPLETE AND FUNCTIONING WIRELESS METERING SYSTEM.
17. PROVIDE PRESSURE TREATED 4"X4" POSTS AND PRESSURE TREATED BACKBOARD TO MOUNT NEW METER-MAINS TO NEW WOODEN PIER. VERIFY EXACT LOCATION WITH BOURNE CONSULTING PRIOR TO WORK.
18. (1) 2-1/2" CONDUIT CAPPED BELOW BOARDWALK FOR FUTURE USE.

COMMONWEALTH OF MASSACHUSETTS DAVID A. AQUITEMAGNE ELECTRICAL No.30175 REGISTERED PROFESSIONAL ENGINEER

RDK ENGINEERS
Andover, MA - Boston, MA - Amherst, MA
Durham, NC - Charlotte, NC
70 Fargo Street Boston, MA 02210-1964
T.617-345-9885

0 30 60
SCALE: 1" = 30'-0"

RDK PROJECT NO. 20140616

WHARF REPLACEMENT PROJECT
TOWN OF PLYMOUTH
PLYMOUTH, MA
NOVEMBER 2014

REVISIONS

BCE Bourne Consulting Engineering, PC
3 Bent Street
Franklin, MA 02038
TEL. (508) 533-6666 FAX. (508) 533-0600

DRAWN:
CHECKED:
APPROVED:
DATE: 11/25/14

DRAWING NO. 30780-01-E100
SHEET 22 OF 27

G:\2014\20140616_Plymouth Town Wharf Electrical Engineering\1200 Drawings\1204 Electrical\20140616 E100 ELECTRICAL SITE PLAN.dwg [24x36] November 26, 2014 - 9:30am schem

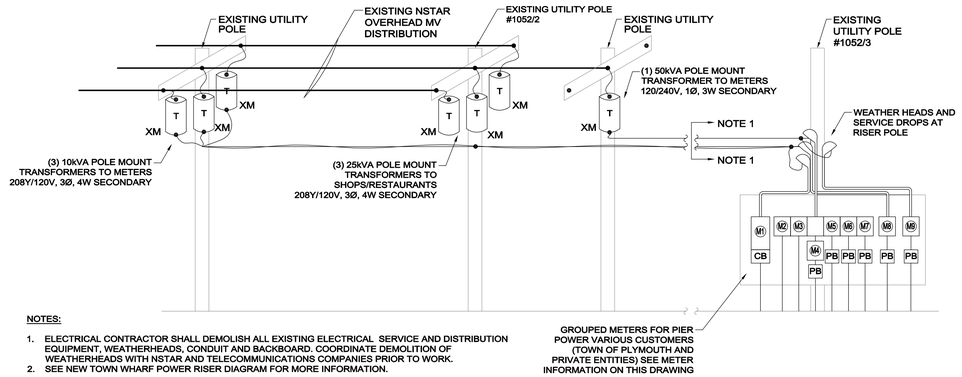

NOTES:

1. ELECTRICAL CONTRACTOR SHALL DEMOLISH ALL EXISTING ELECTRICAL SERVICE AND DISTRIBUTION EQUIPMENT, WEATHERHEADS, CONDUIT AND BACKBOARD. COORDINATE DEMOLITION OF WEATHERHEADS WITH NSTAR AND TELECOMMUNICATIONS COMPANIES PRIOR TO WORK.
2. SEE NEW TOWN WHARF POWER RISER DIAGRAM FOR MORE INFORMATION.

RDK

EXISTING TOWN WHARF POWER RISER DIAGRAM - METER BANK

N.T.S.

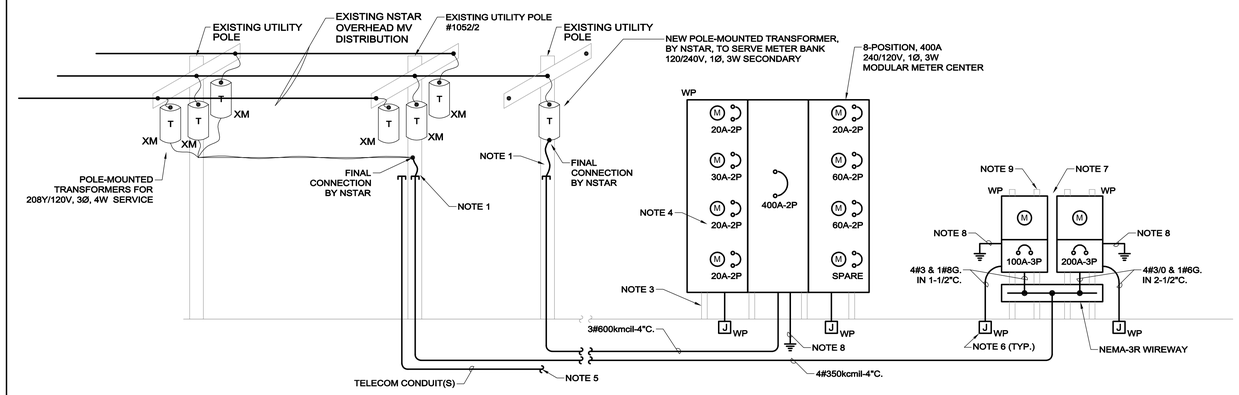

NOTES:

1. PROVIDE 4" CONDUIT PER RISER POLE DETAIL ON THIS DRAWING. ALSO PROVIDE 20' OF COILED WIRE FOR CONNECTION TO OVERHEAD DISTRIBUTION BY NSTAR.
2. ELECTRICAL CONTRACTOR SHALL INTERCEPT EXISTING UNDERGROUND FEEDERS, ROUTE VIA NEW ELECTRIC HANDHOLE AND EXTEND TO NEW METER BANK.
3. PROVIDE STAINLESS STEEL UNISTRUT TO SUPPORT METER BANK AS REQUIRED. VERIFY EXACT LOCATION AND ORIENTATION WITH OWNER AND BOURNE CONSULTING PRIOR TO WORK.
4. VERIFY EXACT CUSTOMER CIRCUIT BREAKER SIZES PRIOR TO ORDERING AND PROVIDE CONFIGURATION TO MATCH EXISTING. INSTALLATION SHALL BE IN ACCORDANCE WITH THE NEC AND NSTAR REQUIREMENTS.
5. COORDINATE WITH VERIZON, COMCAST AND ANY OTHER REQUIRED TELECOMMUNICATIONS UTILITIES TO REMOVE EXISTING CUSTOMER SERVICE POINTS FROM EXISTING PLYWOOD BACKBOARD AND INSTALL NEW CUSTOMER TERMINATIONS AT EACH TENANT.
6. PROVIDE WEATHERPROOF POLYCARBONATE JUNCTION BOXES AND NEW FEEDERS AS REQUIRED TO INTERCEPT AND RE-FEED EXISTING ELECTRIC SERVICES AND FEEDERS TO EACH TENANT.
7. PROVIDE NEW METER-MAINS FOR EACH EXISTING 208Y/120V, 3Ø, 4W SERVICE, MILLBANK U3771 & U5750 SERIES, OR APPROVED EQUAL. METER SOCKET SPECIFICATION SHALL COMPLY WITH NSTAR REQUIREMENTS. VERIFY WITH NSTAR PRIOR TO ORDERING.
8. FROM SERVICE EQUIPMENT, PROVIDE #4 AWG GROUNDING ELECTRODE CONDUCTOR EXOTHERMICALLY WELDED TO REINFORCING BAR (MIN. 20' LONG) IN CONCRETE PIER, PER NEC ARTICLE 250.
9. PROVIDE PRESSURE TREATED 4"X4" POSTS AND PRESSURE TREATED BACKBOARD TO MOUNT NEW METER-MAINS TO NEW WOODEN PIER. VERIFY EXACT LOCATION WITH BOURNE CONSULTING PRIOR TO WORK.

RDK

NEW TOWN WHARF POWER RISER DIAGRAM - METER BANK

N.T.S.

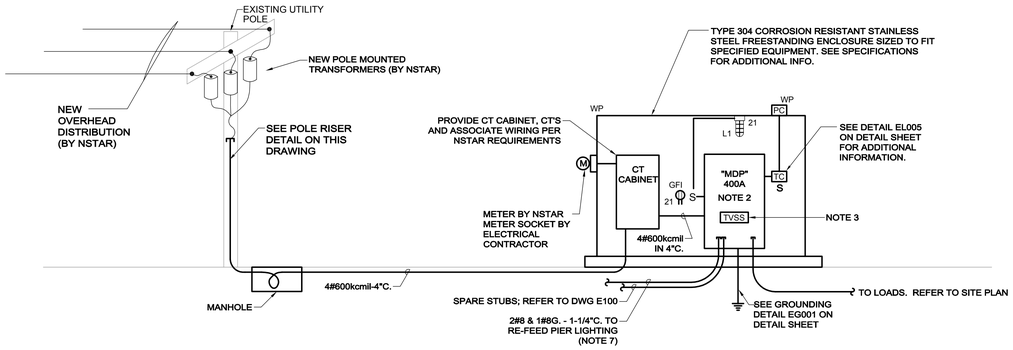

POWER RISER NOTES:

1. THIS DRAWING IS INTENDED TO ILLUSTRATE MAJOR EQUIPMENT AND REQUIRED INTERCONNECTIONS. REFER TO DRAWING E000 FOR LEGEND, SYMBOLS AND GENERAL NOTES THAT MAY PERTAIN TO THIS DRAWING. REFER TO THE FLOOR PLANS FOR EXACT LOCATIONS AND THE SPECIFICATIONS FOR ADDITIONAL INSTALLATION REQUIREMENTS.
2. PROVIDE 100 mA GROUND FAULT PROTECTION FOR MAIN CIRCUIT BREAKER PER NEC ARTICLE 555. MDP SHALL BE SERVICE ENTRANCE RATED.
3. SERVICE ENTRANCE TVSS SHALL HAVE A MAXIMUM SURGE RATING CAPACITY OF 125KA PER MODE (250KA PER PHASE). TVSS SHALL BE INTEGRALLY MOUNTED INSIDE THE PANELBOARD ENCLOSURE AND DIRECTLY CONNECTED TO THE BUS VIA DISCONNECT MEANS. PROVIDE WITH INDICATING LAMPS, SURGE COUNTER AND FORM C CONTACTS. TVSS SHALL BE TG SERIES AS MANUFACTURED BY CURRENT TECHNOLOGY, LM SERIES BY LIEBERT OR CPS SERIES FROM CUTLER HAMMER.
4. THE SERVICE AND ALL SEPARATELY DERIVED SYSTEMS SHALL BE GROUNDED IN ACCORDANCE WITH THE REQUIREMENTS OF ARTICLE 250 OF THE NEC. BOND ALL ELECTRICALLY CONDUCTIVE MATERIALS SUCH AS METAL PIPING SYSTEMS AND STRUCTURAL STEEL TO THE GROUNDING SYSTEM. REFER TO DETAILS FOR ADDITIONAL INFORMATION.
5. ELECTRICAL CONTRACTOR SHALL PAY ALL UTILITY BACKCHARGES.
6. PROVIDE GROUNDING AND OVERALL INSTALLATION IN ACCORDANCE WITH ALL NSTAR REQUIREMENTS.
7. INTERCEPT EXISTING PIER LIGHTING CIRCUIT AND RE-FEED FROM NEW DISTRIBUTION. MATCH EXISTING SITE LIGHTING CIRCUIT VOLTAGE AND SERVICE CONFIGURATION .

RDK

NEW TOWN WHARF PARTIAL POWER RISER DIAGRAM - NEW PIER POWER

N.T.S.

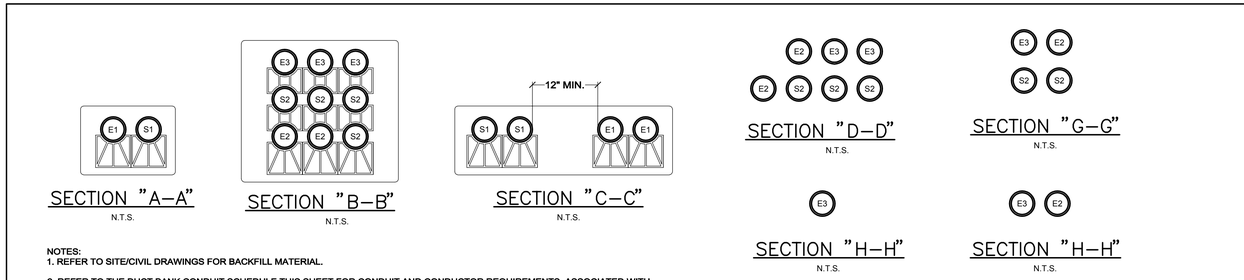

NOTES:
1. REFER TO SITE/CIVIL DRAWINGS FOR BACKFILL MATERIAL.

2. REFER TO THE DUCT BANK CONDUIT SCHEDULE THIS SHEET FOR CONDUIT AND CONDUCTOR REQUIREMENTS ASSOCIATED WITH CONDUIT TAG.

3. PROVIDE MINIMUM 18" SEPARATION BETWEEN ALL POWER AND COMMUNICATIONS CONDUITS. TYPICAL.

RDK

ELECTRICAL DUCT AND CONDUIT SECTIONS

ES004

DUCT BANK CONDUIT SCHEDULE

TAG	DESCRIPTION	CONDUIT	CONDUCTORS
E1	ELECTRIC SERVICE	4"	REFER TO POWER RISER DIAGRAMS
E2	POWER CONDUIT	2-1/2"	REFER TO SITE PLAN
E3	POWER CONDUIT	1-1/4"	REFER TO SITE PLAN
S1	SPARE	4"	NOTE 6
S2	SPARE	2-1/2"	NOTE 6
S3	SPARE	1-1/4"	NOTE 6

NOTES:
1. REFER TO DUCT BANK SECTIONS FOR CORRESPONDING CONDUIT AND CONDUCTOR.
2. REFER TO THE TYPICAL DUCTBANK SECTION FOR DETAILS REQUIRED IN THE CONSTRUCTION OF THE DUCT BANK ENVELOPE.
3. REFER TO THE SPECIFICATIONS FOR ADDITIONAL INFORMATION INCLUDING BUT NOT LIMITED TO DUCT BANK REINFORCEMENT REQUIRED UNDER PAVED AREAS INTENDED FOR VEHICULAR TRAFFIC AND AT MANHOLE/BUILDING INTERFACES.
4. ALL CONDUCTORS INSTALLED IN DUCT SHALL BE SUITABLE FOR WET LOCATIONS.
5. ALL SERVICE ENTRANCE CONDUCTORS INSTALLED IN DUCT SHALL BE TYPE USE.
6. PROVIDE ALL EMPTY/SPARE CONDUIT WITH END BUSHINGS AND NYLON PULL STRINGS.

EXISTING NSTAR METER INFORMATION

METER TAG	NSTAR METER NUMBER	OWNER	SERVICE
M1	5095338	TENANT (JIB CRANES)	208Y/120V, 3Ø, 4W, 100A-3P
M2	1983811	TENANT	120/240V, 1Ø, 3W
M3	1983810	TENANT	120/240V, 1Ø, 3W, 30A-2P
M4	1983809	TENANT	120/240V, 1Ø, 3W, 20A-2P
M5	1547087	TENANT	120/240V, 1Ø, 3W
M6	1983812	TENANT	120/240V, 1Ø, 3W
M7	5055449	TOWN OF PLYMOUTH HARBORMASTER	120/240V, 1Ø, 3W, 60A-2P
M8	5080382	TENANT (JIB CRANE)	208Y/120V, 3Ø, 4W, 200A-3P
M9	1983808	TENANT	120/240V, 1Ø, 3W

208V 3Ø SERVICES TO BE RE-FED VIA NEW METER-MAINS. REFER TO POWER RISER, THIS DWG.

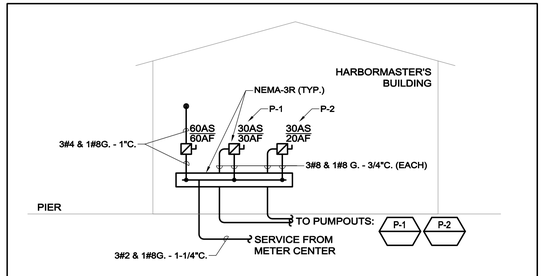

RDK

HARBORMASTER & PUMPOUT POWER

N.T.S.

ELECTRICAL DETAILS

WHARF REPLACEMENT PROJECT
TOWN OF PLYMOUTH
PLYMOUTH, MA
NOVEMBER 2014

COMMONWEALTH OF MASSACHUSETTS
DAVID J. COURTEMANCHE
ELECTRICAL
No. 30175
REGISTERED
PROFESSIONAL ENGINEER

RDK ENGINEERS
Andover, MA - Boston, MA - Amherst, MA
Durham, NC - Charlotte, NC
70 Fargo Street Boston, MA 02210-1964
T.617-345-9885

RDK PROJECT NO. 20140616

REVISIONS

BCE Bourne Consulting Engineering, PC
3 Beal Street
Franklin, MA 02038
TEL. (508) 533-6666 FAX. (508) 533-0600

DRAWN:
CHECKED:
APPROVED:
DATE: 11/25/14

DRAWING NO. 30780-01-E200

SHEET 23 OF 27

Q:\2014\20140616 - Plymouth Town Wharf Electrical Engineering\1200 Drawings\1204 Electrical\20140616 E200 ELECTRICAL DETAILS.dwg [24x36] November 26, 2014 - 9:30am sshen

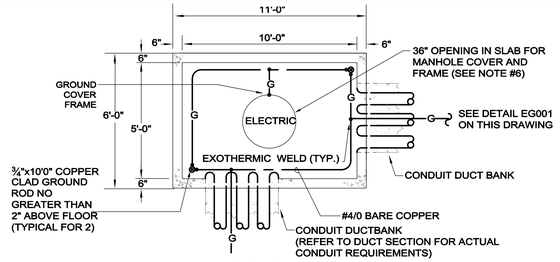

PLAN VIEW

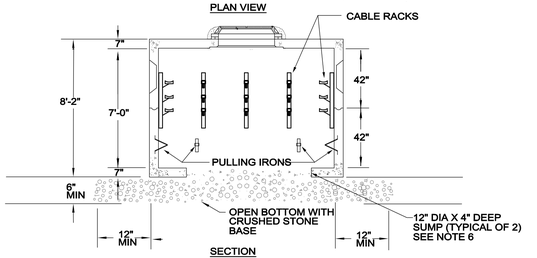

SECTION

NOTES:
1. PRECAST UNITS SHALL BE THE PRODUCTS OF A MANUFACTURER REGULARLY ENGAGED IN THE SUPPLY OF PRECAST CONCRETE MANHOLES AND HANDHOLES, INCLUDING PRODUCTS BY AMERICAN PRECAST, ROTONDO OR CHASE. COVER SHALL BE CAST WITH 1 1/2" HIGH LETTERS IDENTIFYING THE SERVICE (PRIMARY, SECONDARY ELECTRIC OR TELEPHONE).

2. DESIGN LOAD SHALL ACCOMMODATE UP TO AASH TO HS20-44.

3. CONCRETE ENCASED DUCT SHALL BE TIED INTO THE HANDHOLE WALL WITH REBAR TO MINIMIZE DIFFERENTIAL SETTLEMENT. REFER TO SPECIFICATION FOR ADDITIONAL INFORMATION.

4. REFER TO SPECIFICATION FOR PULLING IRONS AND CABLE RACK REQUIREMENTS.

5. BOND ALL METAL COMPONENTS WITHIN MANHOLE INCLUDING COVER FRAME TO 2/0 GROUND LOOP WITH #6 BARE COPPER CONDUCTOR.

6. TELECOMMUNICATIONS MANHOLE COVERS SHALL BE LABELED "TELECOMMUNICATIONS".

SITE PLAN SYMBOLS: EM

TYPICAL PRECAST ELECTRIC AND TELECOMMUNICATIONS MANHOLE DETAIL — ES007

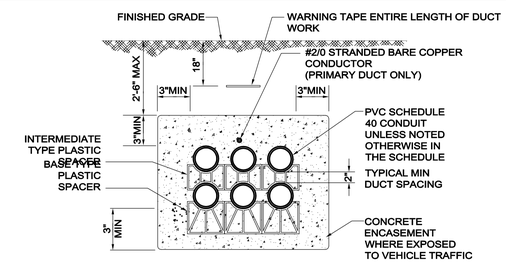

TYPICAL DUCT SECTION

REBAR NOTE:
(4) #6 TOP
(1) #6 EACH FACE
(4) #6 BOTTOM
LAP 2"-1" AT SPLICE
(QUANTITY INCREASES PROPORTIONAL TO CONDUIT QUANTITY)

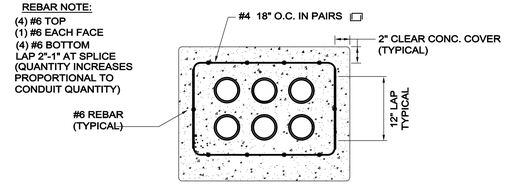

REBAR DETAIL

NOTES:

1. THIS DETAIL IS INTENDED TO ILLUSTRATE CONSTRUCTION OF TYPICAL DUCT BANK. REFER TO REFERENCED SECTION FOR QUANTITY AND SIZE OF CONDUIT REQUIRED. DUCT CONSTRUCTION SHALL BE MODIFIED TO ACCOMMODATE REQUIREMENTS ILLUSTRATED IN THE ACTUAL SECTION, UTILIZING THE CRITERIA ESTABLISHED IN THIS DETAIL.

2. REBAR SHALL BE USED FOR ALL DUCT BANKS INSTALLED UNDER TRAVELED WAYS, ROADWAYS, AND TRANSITIONS INTO MANHOLES/HANDHOLES AND FOUNDATIONS. REFER TO SPECIFICATIONS FOR ADDITIONAL DETAILS.

3. WARNING TAPE SHALL BE DETECTABLE TYPE FOIL BACKED 4 MIL POLYETHYLENE WITH FADE RESISTANT "BURIED ELECTRIC LINE BELOW" A MINIMUM OF 12 INCHES ABOVE THE BURIED SERVICE. TAPE SHALL BE EQUAL TO T & B NAF-0705.

4. SPACERS SHALL ACCOMMODATE A MINIMUM OF TWO (2) INCH CONDUIT SEPARATION AND THREE (3) INCHES FROM THE TOP, BOTTOM AND SIDE EDGES OF THE DUCT BANK. SPACERS SHALL ACCOMMODATE THE SPECIFIED CONDUIT SIZES AND INTERLOCK HORIZONTALLY. SPACERS SHALL BE EQUAL TO CARLON OR UNDERGROUND DEVICES INCORPORATED.

TYPICAL ELECTRICAL DUCT DETAIL — ES002

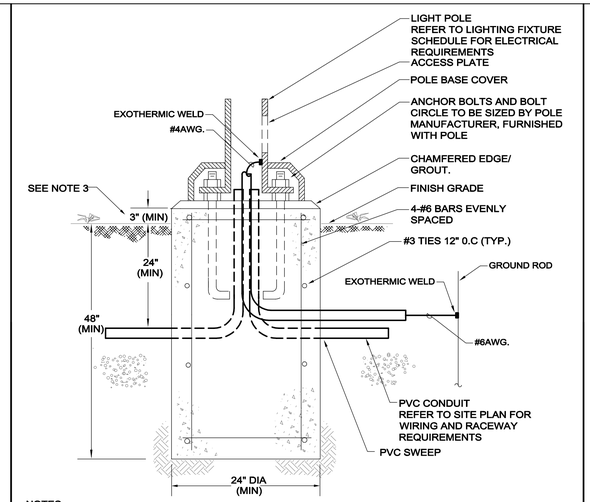

NOTES:
1. BASE DETAIL PROVIDED TO INDICATE GENERAL INTENT OF THE ELECTRICAL INSTALLATION. MODIFY BASE DEPTH AND DIAMETER TO ACCOMMODATE LIGHTING FIXTURE AND SOIL CHARACTERISTICS.

2. COORDINATE ANCHOR BOLT PLACEMENT WITH GENERAL CONTRACTOR. POLE BASE EXCAVATION FORMING, REBAR AND CONCRETE BY G.C.

3. ELEVATION ABOVE FINISH GRADE SHALL BE 3" FOR INSTALLATIONS IN ISLANDS/PERIMETERS AND 3'0" IN PAVED AREA UNLESS OTHERWISE NOTED.

TYPICAL SITE LIGHTING POLE BASE DETAIL — ES014

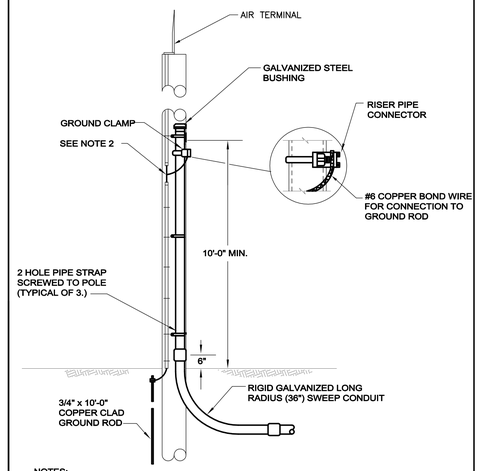

NOTES:
1. RISER PIPES SHALL BE LOCATED ON A STREET QUARTER OF POLE & WHEN POSSIBLE ON THE QUARTER AWAY FROM APPROACHING TRAFFIC.

2. GROUND METAL RISER PIPE TO ARRESTER GROUND LEAD WHERE AVAILABLE. PROVIDE AND INSTALL A #6 BARE COPPER GROUND WIRE AND MOLDING EXTENDING TO TOP OF STEEL PIPE.

3. GROUND CABLE CONNECTIONS SHALL BE EXOTHERMIC WELD.

UTILITY POLE RISER DETAIL — ES001

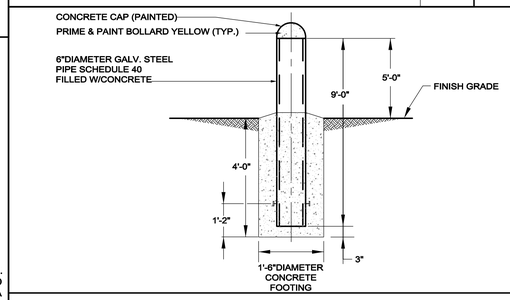

PROTECTION BOLLARD DETAIL — ES012

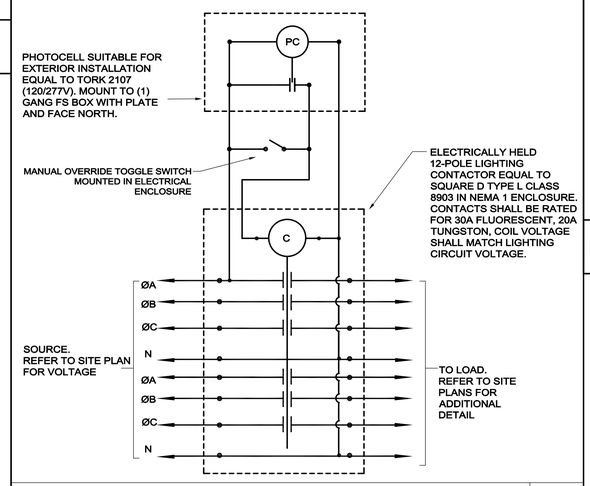

SITE LIGHTING TIME SWITCH AND PHOTOCELL CONTROLLED CONTACTOR DETAIL — EL005

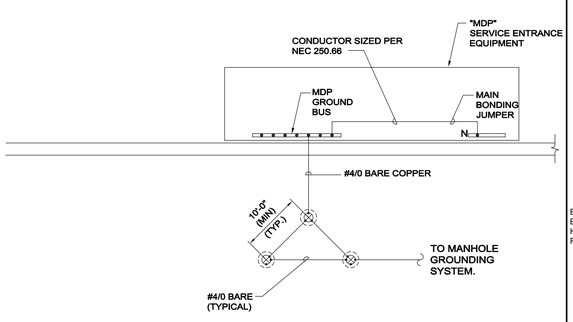

NOTES:

1. THIS DRAWING IS INTENDED TO ILLUSTRATE THE SERVICE GROUNDING REQUIREMENTS. REFER TO NEC ARTICLE 250 FOR ADDITIONAL DETAILS.

2. ALL CONNECTIONS SHALL BE EXOTHERMIC WELDS WITH THE EXCEPTION OF MECHANICAL LUGS IN THE SERVICE ENTRANCE EQUIPMENT.

ELECTRIC SERVICE GROUNDING ELECTRODE DETAIL — EG001

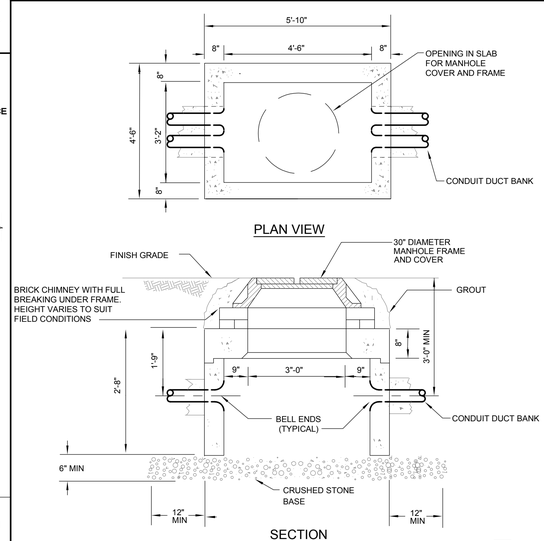

PLAN VIEW

SECTION

SITE PLAN SYMBOLS: HH

NOTES:
1. FRAME AND COVER SHALL BE CAST IRON BY BOSTON FOUNDRY OR EQUAL BY LEBARON OR NEENAH. COVER SHALL BE CAST WITH 1 1/2" HIGH LETTERS IDENTIFYING THE SERVICE (PRIMARY, SECONDARY ELECTRIC OR TELEPHONE).

2. DESIGN LOAD SHALL ACCOMMODATE UP TO AASH TO HS20-44.

3. CONCRETE ENCASED DUCT SHALL BE TIED INTO THE HANDHOLE WALL TO MINIMIZE DIFFERENTIAL SETTLEMENT. REFER TO SPECIFICATION FOR ADDITIONAL INFORMATION.

TYPICAL PRECAST HANDHOLE DETAIL — ES006

ELECTRICAL DETAILS

WHARF REPLACEMENT PROJECT
TOWN OF PLYMOUTH
PLYMOUTH, MA
NOVEMBER 2014

COMMONWEALTH OF MASSACHUSETTS — DAVID J. COURTEMANCHE — ELECTRICAL — No. 30175 — REGISTERED PROFESSIONAL ENGINEER

RDK ENGINEERS
Andover, MA - Boston, MA - Amherst, MA
Durham, NC - Charlotte, NC
70 Fargo Street Boston, MA 02210-1964
T.617-345-9885

Bourne Consulting Engineering, PC
3 Beal Street
Franklin, MA 02038
TEL. (508) 533-6666 FAX. (508) 533-0600

RDK PROJECT NO. 20140616

REVISIONS

DRAWN:
CHECKED:
APPROVED:
DATE: 11/25/14

DRAWING NO. 30780-01-E201

Q:\2014\20140616 - Plymouth Town Wharf Electrical Engineering\700 Drawings\1204 Electrical\20140616 E201 ELECTRICAL DETAILS.dwg [24x36] November 26, 2014 - 9:37am ezhen

POWER NOTES:

1. REFER TO DRAWING E000 FOR LEGEND, SYMBOLS AND GENERAL NOTES.
2. REFER TO STRUCUTRAL ENGINEERING DRAWINGS FOR ASSOCIATED NOTES, MOUNTING DETAILS, HEIGHTS AND EXACT LOCATIONS OF ALL DEVICES.
3. CIRCUIT NUMBERS ARE DIAGRAMMATIC. EXACT NUMBERS SHALL BE DETERMINED IN THE FIELD AND REFLECTED ON AS-BUILT DOCUMENTATION BY THE ELECTRICAL CONTRACTOR. THE ASSOCIATED CIRCUIT NUMBERS THAT ARE APPLIED TO EACH DEVICE AND PIECE OF EQUIPMENT INFERS INTERCONNECTING BRANCH CIRCUITRY. INTERCONNECTING BRANCH WIRING SHALL BE SIZED EQUAL TO THE HOMERUN UNLESS NOTED OTHERWISE.
4. VOLTAGE DROP HAS BEEN CONSIDERED IN THE DESIGN OF ALL BRANCH CIRCUITRY AND FEEDER SIZES BASED UPON THE ILLUSTRATED EQUIPMENT LAYOUTS AND SHORTEST CONDUCTOR/RACEWAY ROUTING. THE ELECTRICAL CONTRACTOR SHALL BE RESPONSIBLE FOR DEVIATIONS TAKEN THAT WILL INCREASE CONDUCTOR/RACEWAY ROUTING LENGTHS. BRANCH CIRCUITS LONGER THAN 75' FOR 120V FROM PANEL TO LAST OUTLET SHALL BE INCREASED A MINIMUM OF ONE SIZE ABOVE THAT SPECIFIED TO LIMIT VOLTAGE DROP TO LESS THAN 3%. FEEDERS SHALL FOLLOW SIMILAR GUIDELINES AND BE LIMITED TO 2% DROP.
5. ALL EXISTING OVERHEAD UTILITIES SHALL BE RELOCATED TO NEW UNDERGROUND DISTRIBUTION. ELECTRICAL CONTRACTOR SHALL COORDINATE WITH APPROPRIATE UTILITY COMPANIES (VERIZON, COMCAST, TOWN OF PLYMOUTH FIBER, ETC.) TO ORCHESTRATE INSTALLATION OF NEW COMMUNICATIONS SERVICES AT EACH CUSTOMER STRUCTURE AND DEMOLITION OF EXISTING OVERHEAD LINES, ASSOCIATED TERMINAL BOXES, WIRES, ETC. PROVIDE CONDUIT SIZE(S) PER UTILITY COMPANY SPECIFICATIONS. COORDINATE ALL WORK WITH UTILITIES AND CUSTOMERS TO LIMIT CUSTOMER DOWN TIME TO ONE (1) OUTAGE, WHICH SHALL NOT EXCEED 3 HOURS. COORDINATE WITH NSTAR FOR ELECTRICAL DEMOLITION AND NEW SERVICE CHANGEOVERS. REFER TO ELECTRICAL SITE PLAN FOR MORE INFORMATION.
6. DEMOLISH EXISTING UTILITY POLE #1052/3. ELECTRICAL CONTRACTOR SHALL PAY ALL ASSOCIATED UTILITY BACK CHARGES FOR POLE DEMOLITION. COORDINATE WORK WITH ALL PERTINENT UTILITIES.

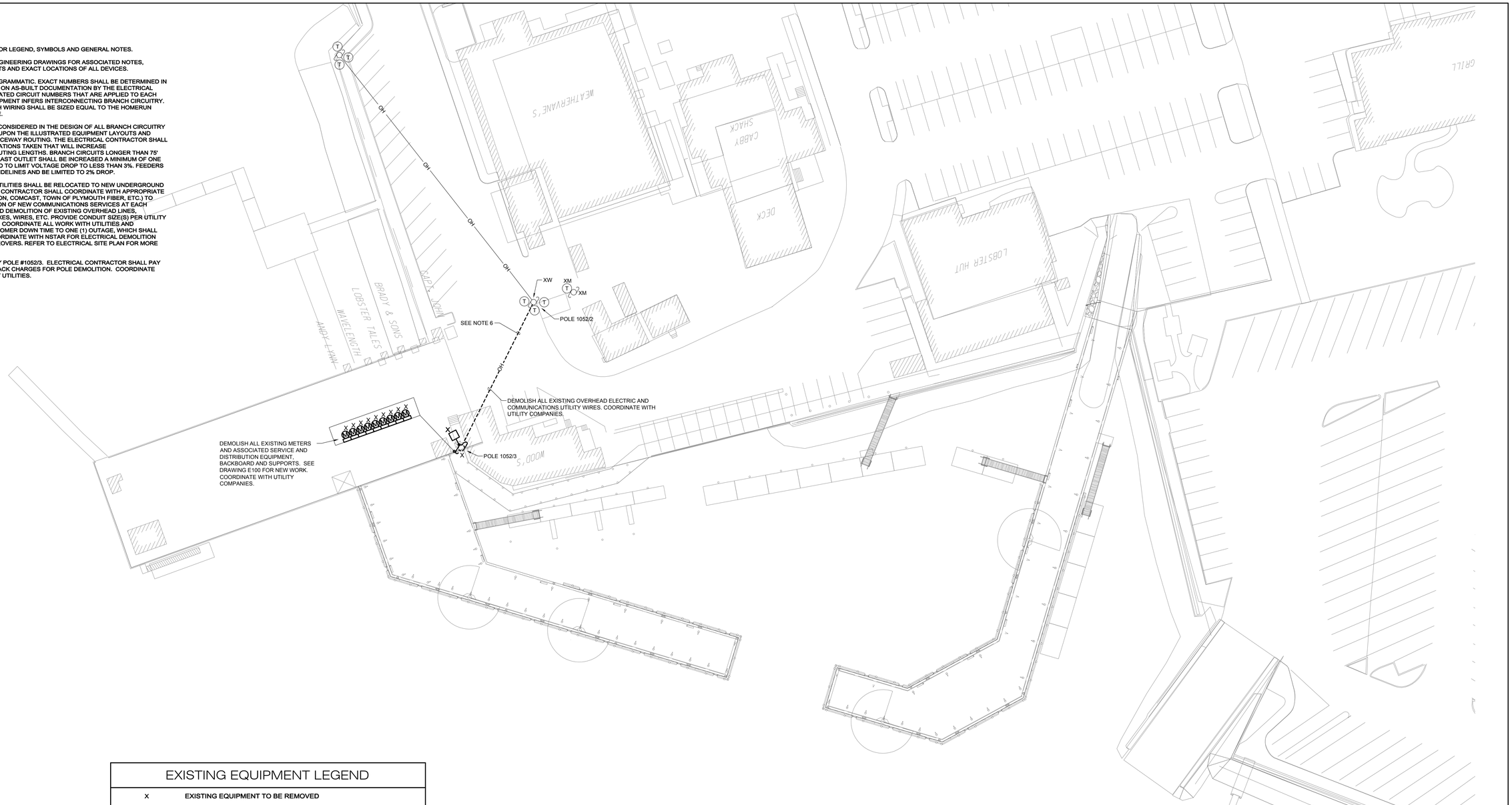

EXISTING EQUIPMENT LEGEND	
x	EXISTING EQUIPMENT TO BE REMOVED
▭	EXISTING EQUIPMENT FOR INFORMATION ONLY- INDICATED BY SYMBOL WITH LIGHT AND OUT OF FUNCTION LINE TYPE
▭ (dashed)	EXISTING EQUIPMENT TO BE DEMOLISHED- INDICATED BY SYMBOL WITH DASHED AND IN FUNCTION LINE TYPE

ELECTRICAL DEMOLITION SITE PLAN

WHARF REPLACEMENT PROJECT
TOWN OF PLYMOUTH
PLYMOUTH, MA
NOVEMBER 2014

COMMONWEALTH OF MASSACHUSETTS
DAVID J. COURTEMANCHE
ELECTRICAL
No. 30175
REGISTERED PROFESSIONAL ENGINEER

RDK ENGINEERS
Andover, MA - Boston, MA - Amherst, MA
Durham, NC - Charlotte, NC
70 Fargo Street Boston, MA 02210-1964
T.617-345-9885

0 30 60
SCALE: 1" = 30'-0"

RDK PROJECT NO. 20140616

REVISIONS

BCE Bourne Consulting Engineering, PC
3 Beal Street
Franklin, MA 02038
TEL. (508) 533-6666 FAX. (508) 533-0600

DRAWN:
CHECKED:
APPROVED:
DATE: 11/25/14

DRAWING NO. 30780-01-ED01
SHEET 25 OF 27

Q:\2014\30780\EB\18 - Plymouth Town Wharf\Electrical Engineering\1200 Drawings\1204 Electrical\30780\18 ED01 E1 ELECTRICAL DEMOLITION PLAN.dwg [24x36] November 26, 2014 - 8:31am sthen

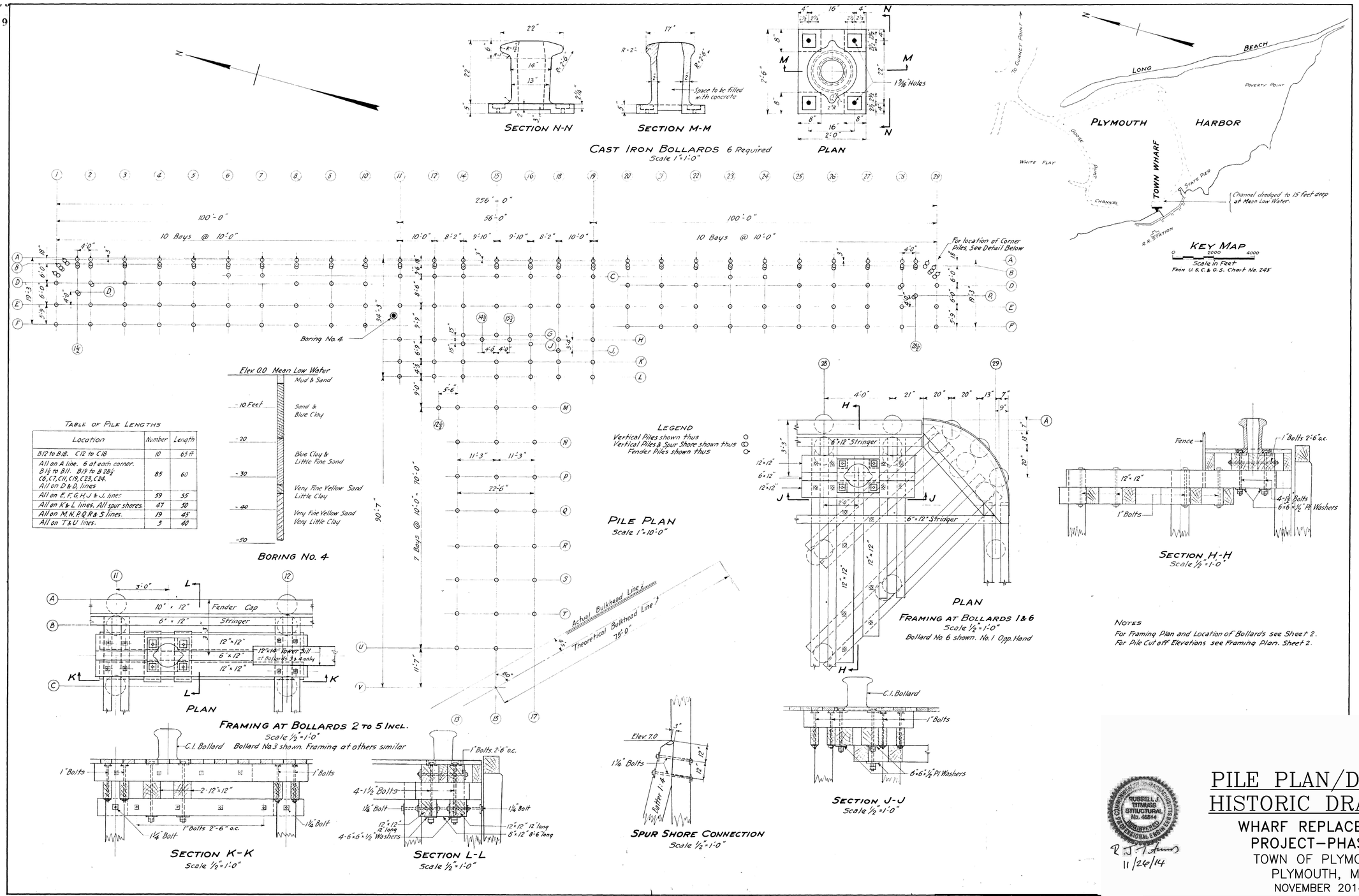

TABLE OF PILE LENGTHS

Location	Number	Length
B12 to B18. C12 to C18	10	65 ft
All on A line. 6 at each corner. B1½ to B11. B19 to B26½. C6, C7, C11, C19, C23, C24. All on D & D, lines	85	60
All on E, F, G, H, J & J, lines	59	55
All on K & L lines. All spur shores.	47	50
All on M, N, P, Q, R & S lines.	19	45
All on T & U lines.	5	40

NOTES

For Framing Plan and Location of Bollards see Sheet 2.
For Pile Cut off Elevations see Framing Plan. Sheet 2.

RUSSELL J. TITMUSS STRUCTURAL No. 46814 REGISTERED PROFESSIONAL ENGINEER COMMONWEALTH OF MASSACHUSETTS

11/26/14

PILE PLAN/DETAIL HISTORIC DRAWING

WHARF REPLACEMENT
PROJECT–PHASE I
TOWN OF PLYMOUTH
PLYMOUTH, MA
NOVEMBER 2014

NOTE: DRAWING NOT TO SCALE
DETAILS ARE PROVIDED FOR INFORMATION ONLY CONTRACTOR SHALL MAKE HIS OWN INSPECTION TO CONFIRM QUANTITIES AND DETAILS

REVISIONS

Bourne Consulting Engineering, PC
3 Bent Street
Franklin, MA 02038
TEL. (508) 533-8666 FAX. (508) 533-0600

DRAWN: JSF
CHECKED: RJT
APPROVED: RJT
DATE: 11/26/14

DRAWING NO. 34032-01-29

File: X:\34946\34032 PLYMOUTH T WHARF PHASE I\FINAL DESIGN\SHT-29 PLYMOUTH HIST DWG.DWG - 11/12/2012 1:02 PM

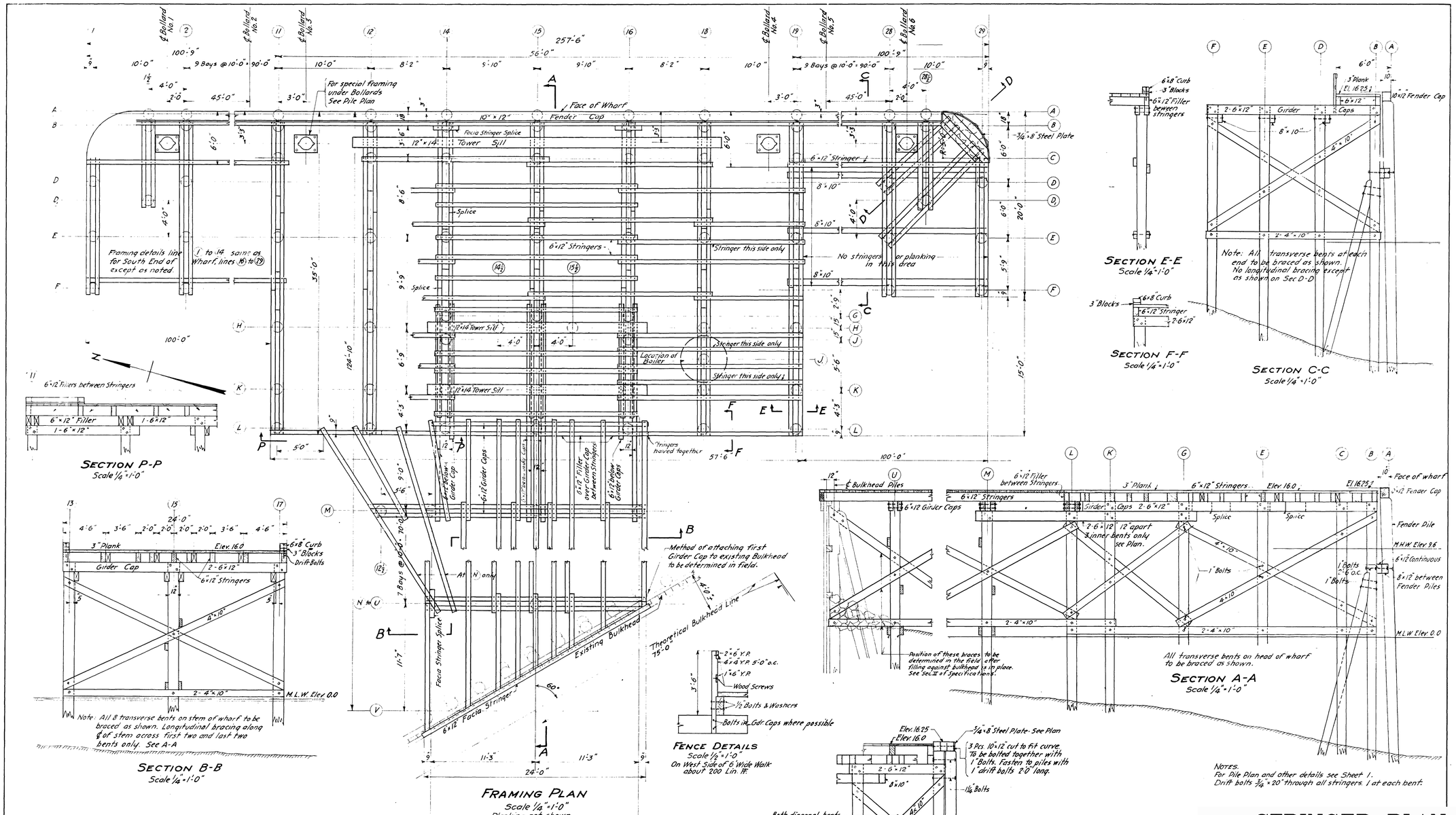

STRINGER PLAN/DETAILS
HISTORIC DRAWING

WHARF REPLACEMENT
PROJECT–PHASE I
TOWN OF PLYMOUTH
PLYMOUTH, MA
NOVEMBER 2014

RUSSELL J. TITMUSS STRUCTURAL No. 46514 REGISTERED PROFESSIONAL ENGINEER

11/26/14

NOTE: DRAWING NOT TO SCALE
DETAILS ARE PROVIDED FOR INFORMATION ONLY CONTRACTOR SHALL MAKE HIS OWN INSPECTION TO CONFIRM QUANTITIES AND DETAILS

REVISIONS

BCE Bourne Consulting Engineering, PC
3 Beaf Street
Franklin, MA 02038
TEL. (508) 533-6666 FAX. (508) 533-0600

DRAWN: JSF
CHECKED: RJT
APPROVED: RJT
DATE: 11/26/14

DRAWING NO. 34032-01-30

SHEET 27 OF 27

File: X:\34946\34032 PLYMOUTH T WHARF PHASE 1\FINAL DESIGN\SHT-30 PLYMOUTH HIST DWG.DWG - 11/12/2012 1:02 PM