TOWN OF PLYMOUTH MASSACHUSETTS

COMMUNICATIONS TOWER

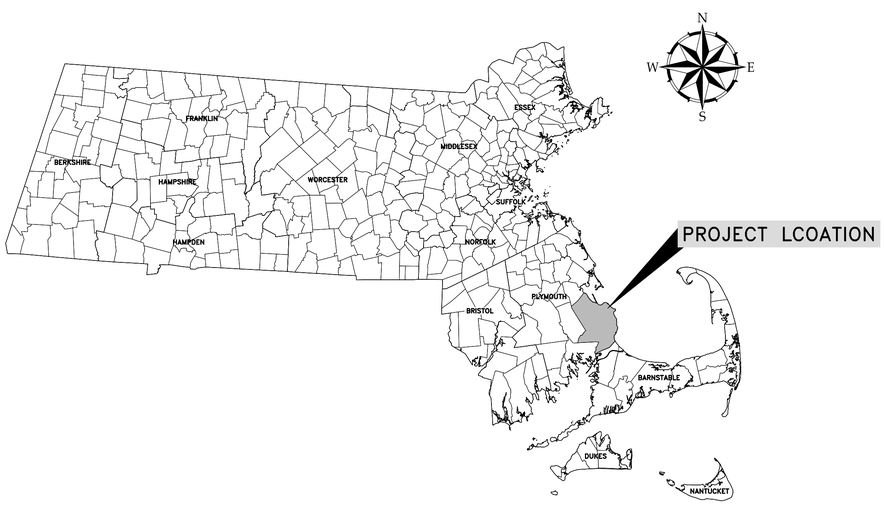

PROJECT LOCATION MAP

25 0 25 50
scale mile

SHEET INDEX

GENERAL

G–000 COVER SHEET

G–001 GENERAL NOTES, LEGEND, AND ABBREVIATIONS

CIVIL

C–200 COMMUNICATIONS TOWER SITE PLAN

C–300 CIVIL DETAILS – 1

ELECTRICAL

E00.01 ELECTRICAL LEGEND

E05.01 ELECTRICAL POWER AND GROUNDING DIAGRAMS, SITE PLAN AND DETAILS

E80.01 ELECTRICAL DETAILS SHEET

JULY 2015

WOODARD & CURRAN

40 SHATTUCK ROAD, SUITE 110
ANDOVER, MASSACHUSETTS 01810
866-702-6371 | www.woodardcurran.com
COMMITMENT & INTEGRITY DRIVE RESULTS

W&C PROJECT NO. 228949

SOURCE: USGS TOPOGRAPHIC MAP

SITE LOCATION MAP

SCALE: 1=2,000'

½ 0 ½ 1
scale mile

2000 0 2000 4000
scale feet

ISSUED FOR CONSTRUCTION

\\woodardcurran.net\Shared\Projects\228949 Plymouth MA – Communication Tower\wip\Drawings\GENERAL\228949-G-000.dwg, Jul 24, 2015 – 9:36am

GENERAL

FOR THE PURPOSE OF CONSTRUCTION DRAWINGS, THE FOLLOWING DEFINITIONS SHALL APPLY:
OWNER – CITY OF PLYMOUTH MASSACHUSETTS
OEM – ORIGINAL EQUIPMENT MANUFACTURER

1. EXISTING CONDTIONS BASED ON A SURVEY PERFORMED IN APRIL 2015 BY MCKENZIE ENGINEERING GROUP, INC. 150 LONGWATER DRIVE, SUITE 101, NORWELL, MA 02061, (781) 792–3900. HORIZONTAL DATUM IS REFERENCED TO NAD 83 MASSACHUSETTS STATE PLANE, MAINLAND ZONE, US FOOT. VERTICAL DATUM IS REFERENCED TO NORTH AMERICAN VERTICAL DATUM OF 1988 (NAVD 88).
1. PRIOR TO THE SUBMISSION OF BIDS, THE BIDDING CONTRACTOR SHALL VISIT THE CELL SITE TO FAMILIARIZE THEMSELVES WITH THE EXISTING CONDITIONS AND TO CONFIRM THAT THE WORK CAN BE ACCOMPLISHED AS SHOWN ON THE CONSTRUCTION DRAWINGS. ANY DISCREPANCY FOUND SHALL BE BROUGHT TO THE ATTENTION OF ENGINEER.
2. METHODS AND MATERIALS USED IN THE CONSTRUCTION OF SITE IMPROVEMENTS FOR THIS PROJECT SHALL CONFORM TO THE CURRENT CONSTRUCTION STANDARDS AND SPECIFICATIONS OF THE MASSACHUSETTS DEPARTMENT OF TRANSPORTATION.
3. ALL WORK SHALL CONFORM TO ALL APPLICABLE MUNICIPAL AND UTILITY COMPANY SPECIFICATIONS AND LOCAL, STATE AND FEDERAL JURISDICTIONAL CODES, ORDINANCES AND APPLICABLE REGULATIONS.
4. ALL WORK SHALL INCLUDE FURNISHING MATERIALS, EQUIPMENT, APPURTENANCES, AND LABOR NECESSARY TO COMPLETE ALL INSTALLATIONS AS INDICATED ON THE DRAWINGS.
5. CONTRACTOR SHALL INSTALL ALL EQUIPMENT AND MATERIALS IN ACCORDANCE WITH MANUFACTURERS RECOMMENDATIONS UNLESS SPECIFIED OTHERWISE.
6. CONTRACTOR SHALL NOTIFY "DIG–SAFE" (1–888–344–7233) AT LEAST 72 HOURS BEFORE EXCAVATING.
7. CONTRACTOR SHALL BE RESPONSIBLE FOR SITE SECURITY AND JOB SAFETY. CONSTRUCTION ACTIVITIES SHALL BE IN ACCORDANCE WITH OSHA STANDARDS, STATE AND LOCAL REQUIREMENTS.
8. UPON AWARD OF CONTRACT, CONTRACTOR SHALL MAKE NECESSARY CONSTRUCTION NOTIFICATIONS AND APPLY FOR AND OBTAIN NECESSARY PERMITS, PAY FEES, AND POST BONDS ASSOCIATED WITH THE WORK INDICATED ON THE DRAWINGS AND CONTRACT DOCUMENTS.
9. AREAS OUTSIDE THE LIMITS OF PROPOSED WORK DISTURBED BY THE CONTRACTOR'S OPERATIONS SHALL BE RESTORED BY THE CONTRACTOR TO THEIR ORIGINAL CONDITION AT THE CONTRACTOR'S EXPENSE.
10. DAMAGE TO SURFACE FEATURES, SUBSURFACE FEATURES AND SUBSURFACE INFRASTRUCTURE RESULTING FROM CONSTRUCTION LOADS SHALL BE REPAIRED BY THE CONTRACTOR AT NO ADDITIONAL COST TO OWNER.
11. CONTRACTOR SHALL CONTROL STORMWATER RUNOFF DURING CONSTRUCTION TO PREVENT ADVERSE IMPACTS TO OFF–SITE AREAS, AND SHALL BE RESPONSIBLE TO REPAIR RESULTING DAMAGES, IF ANY, AT NO COST TO OWNER.
12. THE CONTRACTOR SHALL VERIFY THE PROPOSED LAYOUT WITH ITS RELATIONSHIP TO THE EXISTING SITE SURVEY. THE CONTRACTOR SHALL ALSO VERIFY ALL DIMENSIONS, SITE CONDITIONS, AND MATERIAL SPECIFICATIONS AND SHALL NOTIFY THE OWNER AND ENGINEER OF ANY DISCREPANCIES BEFORE COMMENCING OR PROCEEDING WITH WORK.
13. DRAWINGS PROVIDED HERE ARE NOT TO BE SCALED AND ARE INTENDED TO SHOW OUTLINE ONLY.
14. WASTE DISPOSAL: MATERIALS WHICH COULD BE A POTENTIAL SOURCE OF STORM WATER POLLUTION SUCH AS GASOLINE, DIESEL FUEL, HYDRAULIC OIL, ETC., SHALL BE STORED AT THE END OF EACH DAY IN A STORAGE TRAILER OR COVERED LOCATION OR TAKEN OFF–SITE AND PROPERLY DISPOSED OF. ALL TYPES OF WASTE GENERATED AT THIS SITE SHALL BE DISPOSED OF IN A MANNER CONSISTENT WITH STATE LAW AND/OR REGULATIONS.
15. AN APPROVED SET OF PLANS AND ALL APPLICABLE PERMITS MUST BE AVAILABLE AT THE CONSTRUCTION SITE.
16. CONTRACTOR AGREES THAT HE SHALL ASSUME SOLE AND COMPLETE RESPONSIBILITY FOR JOB SITE CONDITIONS DURING THE COURSE OF CONSTRUCTION OF THIS PROJECT, INCLUDING SAFETY OF ALL PERSONS AND PROPERTY; THAT THIS REQUIREMENT SHALL APPLY CONTINUOUSLY AND NOT BE LIMITED TO NORMAL WORKING HOURS; AND THAT THE CONTRACTOR SHALL DEFEND, INDEMNIFY AND HOLD THE OWNER AND THE ENGINEER HARMLESS FROM ANY AND ALL LIABILITY, REAL AND ALLEGED, IN CONNECTION WITH THE PERFORMANCE OF WORK ON THIS PROJECT, EXCEPTING FOR LIABILITY ARISING FROM "THE SOLE NEGLIGENCE OF THE OWNER OR THE ENGINEER." THE CONTRACTOR IS RESPONSIBLE FOR INSTALLING A PROTECTIVE BARRIER AROUND THE SITE PRIOR TO AND MAINTAINED DURING CONSTRUCTION.
17. ALL CONSTRUCTION SHALL BE IN ACCORDANCE WITH THESE SITE PLANS AND INCORPORATE SUBSEQUENT ISSUED PLAN REVISIONS. ANY DEVIATIONS FROM THESE DOCUMENTS SHALL REQUIRE NOTIFICATION TO THE ENGINEER PRIOR TO THE COMMENCEMENT OF/OR CONSTRUCTION OF ANY CHANGE. WITHOUT NOTIFICATION TO THE ENGINEER, THE CONTRACTOR WILL BE WORKING AT HIS OR HER OWN RISK.
18. IF THE SPECIFIED EQUIPMENT CANNOT BE INSTALLED AS SHOWN ON THESE DRAWINGS, THE CONTRACTOR SHALL PROPOSE AN ALTERNATIVE INSTALLATION FOR APPROVAL BY THE OWNER.
19. THE AREAS OF THE OWNERS PROPERTY DISTURBED BY THE WORK AND NOT COVERED BY THE TOWER, EQUIPMENT OR DRIVEWAY, SHALL BE GRADED TO A UNIFORM SLOPE AND STABILIZED TO PREVENT EROSION AS DIRECTED BY THE OWNER OR ENGINEER.

UTILITIES

1. THE LOCATIONS, SIZES, AND TYPES OF EXISTING UTILITIES ARE SHOWN AS AN APPROXIMATE REPRESENTATION ONLY. THE OWNER OR IT'S REPRESENTATIVE(S) HAVE NOT INDEPENDENTLY VERIFIED THIS INFORMATION AS SHOWN ON THE PLANS. THE UTILITY INFORMATION SHOWN DOES NOT GUARANTEE THE ACTUAL EXISTENCE, SERVICEABILITY, OR OTHER DATA CONCERNING THE UTILITIES, NOR DOES IT GUARANTEE AGAINST THE POSSIBILITY THAT ADDITIONAL UTILITIES MAY BE PRESENT THAT ARE NOT SHOWN ON THE PLANS. PRIOR TO ORDERING MATERIALS AND BEGINNING CONSTRUCTION, THE CONTRACTOR SHALL VERIFY AND DETERMINE THE EXACT LOCATIONS, SIZES, AND ELEVATIONS OF THE POINTS OF CONNECTIONS TO EXISTING UTILITIES AND SHALL CONFIRM THAT THERE ARE NO INTERFERENCES WITH EXISTING UTILITIES AND THE PROPOSED UTILITY ROUTES.
2. WHERE AN EXISTING UTILITY IS FOUND TO CONFLICT WITH THE PROPOSED WORK, OR EXISTING CONDITIONS DIFFER FROM THOSE SHOWN SUCH THAT THE WORK CANNOT BE COMPLETED AS INTENDED, THE LOCATION, ELEVATION, AND SIZE OF THE UTILITY SHALL BE ACCURATELY DETERMINED WITHOUT DELAY BY THE CONTRACTOR AND THE INFORMATION SHALL BE FURNISHED IN WRITING BY THE CONTRACTOR TO THE ENGINEER FOR THE RESOLUTION OF THE CONFLICT. THE CONTRACTOR'S FAILURE TO NOTIFY PRIOR TO PERFORMING ADDITIONAL WORK RELEASES OWNER FROM OBLIGATIONS FOR ADDITIONAL PAYMENTS WHICH OTHERWISE MAY BE WARRANTED TO RESOLVE THE CONFLICT.

EROSION CONTROL

1. PRIOR TO STARTING ANY WORK ON THE SITE, THE CONTRACTOR SHALL NOTIFY THE OWNER AND SHALL INSTALL EROSION CONTROL MEASURES AS SHOWN ON THE CONTRACT DOCUMENTS.
2. CONTRACTOR SHALL INSPECT AND MAINTAIN EROSION CONTROL MEASURES DAILY, REMOVE SEDIMENT THEREFROM ON A WEEKLY BASIS AND WITHIN TWELVE HOURS AFTER EACH STORM EVENT, AND DISPOSE OF SEDIMENTS IN AN UPLAND AREA SUCH THAT THEY DO NOT ENCUMBER OTHER DRAINAGE STRUCTURES AND PROTECTED AREAS.
3. CONTRACTOR SHALL BE FULLY RESPONSIBLE TO CONTROL CONSTRUCTION SUCH THAT SEDIMENTATION SHALL NOT AFFECT REGULATORY PROTECTED AREAS, WHETHER SUCH SEDIMENTATION IS CAUSED BY WATER, WIND, OR DIRECT DEPOSIT.
4. CONTRACTOR SHALL PERFORM CONSTRUCTION SEQUENCING SUCH THAT EARTH MATERIALS ARE EXPOSED FOR A MINIMUM TIME BEFORE THEY ARE COVERED, SEEDED, OR OTHERWISE STABILIZED TO PREVENT EROSION.
5. UPON COMPLETION OF CONSTRUCTION AND ESTABLISHMENT OF PERMANENT GROUND COVER, CONTRACTOR SHALL REMOVE AND DISPOSE OF EROSION CONTROL MEASURES.
6. IT SHALL BE THE CONTRACTOR'S RESPONSIBILITY TO CONTROL DUST AND TAKE ALL NECESSARY MEASURES TO ENSURE ALL ROADS ARE MAINTAINED IN A DUST FREE CONDITION AT ALL TIMES THROUGHOUT THE LIFE OF THE PROJECT. REPETITIVE TREATMENTS SHOULD BE APPLIED AS NECESSARY.
7. PERMANENT VEGETATIVE COVER SHALL BE INSTALLED TO ALL DISTURBED AREAS THAT HAVE REACHED FINISH GRADE AS SOON AS POSSIBLE, BUT NOT MORE THAN FOURTEEN (14) DAYS AFTER THE CONSTRUCTION ACTIVITY IN ANY GIVEN AREA HAS PERMANENTLY CEASED. THE RECOMMENDED PERMANENT SEEDING DATES ARE APRIL 1 TO JUNE 15 AND AUGUST 15 TO OCTOBER 1.
8. TEMPORARY VEGETATIVE COVER SHALL BE APPLIED TO ANY DISTURBED AREAS (INCLUDING SOIL STOCKPILE AREAS) THAT HAVE NOT YET REACHED FINISHED GRADE AS SOON AS POSSIBLE, BUT NOT MORE THAN FOURTEEN (14) DAYS AFTER THE CONSTRUCTION ACTIVITY IN THAT AREA HAS TEMPORARILY CEASED, UNLESS THE ACTIVITY IS TO RESUME WITHIN TWENTY–ONE (21) DAYS. THE RECOMMENDED TEMPORARY SEEDING DATES ARE MARCH 1 TO JUNE 15 AND AUGUST 15 TO OCTOBER 1.
9. AREAS WHICH HAVE BEEN TEMPORARILY OR PERMANENTLY SEEDED SHOULD BE MULCHED IMMEDIATELY FOLLOWING SEEDING IN ADDITION TO AREAS WHICH CANNOT BE SEEDED WITHIN THE RECOMMENDED SEEDING DATES AND ANY SOIL STOCKPILE AREAS. TEMPORARY MULCHING SHOULD BE PERFORMED AS SOON AS POSSIBLE, BUT NOT MORE THAN FOURTEEN (14) DAYS AFTER THE CONSTRUCTION ACTIVITY IN THAT AREA HAS TEMPORARILY CEASED UNLESS THE ACTIVITY IS TO RESUME WITHIN TWENTY–ONE (21) DAYS. STRAW OR HAY MULCH, WOOD FIBER MULCH, AND HYDROMULCH ARE RECOMMENDED. THE MATERIALS USED IN MULCHING SHALL CONFORM TO THE REQUIREMENTS LISTED IN SECTION M6.04.0 OF THE MASSACHUSETTS HIGHWAY DEPARTMENT STANDARD SPECIFICATIONS FOR HIGHWAY AND BRIDGES.
10. ALL MULCHES MUST BE INSPECTED PERIODICALLY, IN PARTICULAR AFTER RAINSTORMS, TO CHECK FOR RILL EROSION. WHERE EROSION IS OBSERVED, ADDITIONAL MULCH MUST BE APPLIED. IF NETTING IS USED, THE NET SHOULD BE INSPECTED AFTER RAINSTORMS FOR DISLOCATION OR FAILURE. IF WASHOUTS OR BREAKAGE OCCUR, THE NET MUST BE REINSTALLED AS NECESSARY AFTER REPAIRING DAMAGE TO SLOPE. INSPECTIONS SHOULD TAKE PLACE UNTIL GRASSES ARE FIRMLY ESTABLISHED. GRASS IS CONSIDERED TO BE FIRMLY ESTABLISHED AT A MINIMUM HEIGHT OF THREE (3) INCHES.
11. THE CONTRACTOR SHALL RESTORE DISTURBED AREAS AS CLOSELY AS POSSIBLE. AREAS DAMAGED DURING CONSTRUCTION SHALL BE RESODDED, RESEEDED, OR OTHERWISE RESTORED TO THEIR ORIGINAL STATE. TREES AND OTHER EXISTING VEGETATION SHALL BE RETAINED WHEREVER FEASIBLE.
12. CONTRACTOR SHALL PREVENT DUST, SEDIMENT, AND DEBRIS FROM EXITING THE SITE AND SHALL BE RESPONSIBLE FOR CLEANUP, REPAIRS AND CORRECTIVE ACTION IF SUCH OCCURS.

CONCRETE & REINFORCING STEEL NOTES:

1. ALL CONCRETE WORK SHALL BE IN ACCORDANCE WITH THE ACI 301, ACI 318, ACI 336, ASTM A184, ASTM A185 AND THE DESIGN AND CONSTRUCTION SPECIFICATION FOR CAST–IN–PLACE CONCRETE.
2. ALL CONCRETE SHALL HAVE A MINIMUM COMPRESSIVE STRENGTH OF 3500 PSI AT 28 DAYS, UNLESS NOTED OTHERWISE. A HIGHER STRENGTH (4000PSI) MAY BE USED. ALL CONCRETE WORK SHALL BE IN ACCORDANCE WITH THE ACI 381 CODE REQUIREMENTS
3. REINFORCING STEEL SHALL CONFORM TO ASTM A 615, GRADE 60, DEFORMED UNLESS NOTED OTHERWISE. WELDED WIRE FABRIC SHALL CONFORM TO ASTM A 185 WELDED STEEL WIRE FABRIC UNLESS NOTED OTHERWISE. SPLICES SHALL BE CLASS "B" AND ALL HOOKS SHALL BE STANDARD, UNO.
4. THE FOLLOWING MINIMUM CONCRETE COVER SHALL BE PROVIDED FOR REINFORCING STEEL UNLESS SHOWN OTHERWISE ON DRAWINGS:
   CONCRETE CAST AGAINST EARTH 3 IN.
   CONCRETE EXPOSED TO EARTH OR WEATHER:
   #6 AND LARGER 2 IN.
   #5 AND SMALLER & WWF 1Y2 IN.
   CONCRETE NOT EXPOSED TO EARTH OR WEATHER OR NOT CAST AGAINST THE GROUND:
   SLAB AND WALL 3/4 IN.
   BEAMS AND COLUMNS 1Y2 IN.
5. A CHAMFER 3/4" SHALL BE PROVIDED AT ALL EXPOSED EDGES OF CONCRETE, UNO, IN ACCORDANCE WITH ACI 301 SECTION 4.2.4.
6. INSTALLATION OF CONCRETE EXPANSION/WEDGE ANCHORS SHALL BE PER MANUFACTURER'S WRITTEN RECOMMENDED PROCEDURE. THE ANCHOR BOLT, DOWEL OR ROD SHALL CONFORM TO THE MANUFACTURERS RECOMMENDATION FOR EMBEDMENT DEPTH OR AS SHOWN ON THE DRAWINGS. NO REBAR SHALL BE CUT WITHOUT PRIOR ENGINEERING APPROVAL WHEN DRILLING HOLES IN CONCRETE. SPECIAL INSPECTIONS, REQUIRED BY GOVERNING CODES, SHALL BE PERFORMED IN ORDER TO MAINTAIN MANUFACTURER'S MAXIMUM ALLOWABLE LOADS. ALL EXPANSION/WEDGE ANCHORS SHALL BE STAINLESS STEEL. EXPANSION BOLTS SHALL BE PROVIDED BY SIMPSON OR APPROVED EQUAL.
7. CONCRETE CYLINDER TESTS ARE NOT REQUIRED FOR SLAB ON GRADE WHEN CONCRETE IS LESS THAN 50 CUBIC YARDS (IBC1905.6.2.3) IN THAT EVENT THE FOLLOWING RECORDS SHALL BE PROVIDED BY THE CONCRETE SUPPLIER;
   A. RESULTS OF CONCRETE CYLINDER TEST PERFORMED AT THE SUPPLIERS PLANT.
   B. CERTIFICATION OF MINIMUM COMPRESSIVE STRENGTH FOR THE CONCRETE GRADE SUPPLIED. FOR GREATER THAN 50 CUBIC YARDS THE GC SHALL PERFORM THE CONCRETE CYLINDER TEST.
8. AS AN ALTERNATIVE TO ITEM 7. TEST CYLINDERS SHALL BE TAKEN INITIALLY AND THEREAFTER FOR EVERY 50 YARDS OF CONCRETE FROM EACH DIFFERENT BATCH PLANT.
9. EQUIPMENT SHALL NOT BE PLACED ON NEW PADS FOR SEVEN DAYS AFTER PAD IS POURED, UNLESS IT IS VERIFIED BY CYLINDER TESTS THAT COMPRESSIVE STRENGTH HAS BEEN ATTAINED.

STRUCTURAL STEEL NOTES:

1. ALL STEEL WORK SHALL BE PAINTED OR GALVANIZED IN ACCORDANCE WITH THE DRAWINGS AND SPECIFICATIONS UNLESS OTHERWISE NOTED. STRUCTURAL STEEL SHALL BE ASTM–A–36 UNLESS OTHERWISE NOTED ON THE SITE SPECIFIC DRAWINGS. STEEL DESIGN, INSTALLATION AND BOLTING SHALL BE IN ACCORDANCE WITH THE AMERICAN INSTITUTE OF STEEL CONSTRUCTION (AISC) "MANUAL OF STEEL CONSTRUCTION".
2. ALL WELDING SHALL BE PERFORMED USING E70XX ELECTRODES AND WELDING SHALL CONFORM TO AISC AND AWS D1.1. WHERE FILLET WELD SIZES ARE NOT SHOWN, PROVIDE THE MINIMUM SIZE PER TABLE J2.4 IN THE AISC "MANUAL OF STEEL CONSTRUCTION", 9TH EDITION. PAINTED SURFACES SHALL BE TOUCHED UP.
3. BOLTED CONNECTIONS SHALL USE BEARING TYPE ASTM A325 BOLTS (3/4"Ø) AND SHALL HAVE MINIMUM OF TWO BOLTS UNLESS NOTED OTHERWISE. ALL BOLTS SHALL BE GALVANIZED OR STAINLESS STEEL.
4. NON–STRUCTURAL CONNECTIONS FOR STEEL GRATING MAY USE 3/8" DIA. ASTM A 307 BOLTS (GALV) UNLESS NOTED OTHERWISE.
5. CONTRACTOR SHALL SUBMIT SHOP DRAWINGS FOR ENGINEER REVIEW & APPROVAL ON PROJECTS REQUIRING STRUCTURAL STEEL
6. ALL STRUCTURAL STEEL WORK SHALL BE DONE IN ACCORDANCE WITH AISC SPECIFICATIONS.

SOIL COMPACTION NOTES:

1. CONTRACTOR SHALL BE RESPONSIBLE FOR CLEARING AND GRUBBING OF SITE AND FOR THE REMOVAL OF ALL EXCESS MATERIAL INCLUDING BUT NOT LIMITED TO TOP SOIL, STUMPS, TREES AND DEBRIS. CONTRACTOR SHALL DISPOSE OF ALL MATERIAL IN ACCORDANCE WITH ALL APPLICABLE STATE AND FEDERAL REGULATIONS.
2. EXCAVATE AS REQUIRED TO REMOVE VEGETATION AND TOPSOIL TO EXPOSE NATURAL SUBGRADE AND PLACE CRUSHED STONE AS REQUIRED.
3. COMPACTION CERTIFICATION: AN INSPECTION AND WRITTEN CERTIFICATION BY A QUALIFIED GEOTECHNICAL TECHNICIAN OR ENGINEER IS ACCEPTABLE.
4. AS AN ALTERNATE TO INSPECTION AND WRITTEN CERTIFICATION, THE "UNDISTURBED SOIL" BASE SHALL BE COMPACTED WITH "COMPACTION EQUIPMENT", LISTED BELOW, TO AT LEAST 90% MODIFIED PROCTOR MAXIMUM DENSITY PER ASTM D 1557 METHOD C.
5. COMPACTED SUBBASE SHALL BE UNIFORM AND LEVELED. PROVIDE 6" MINIMUM CRUSHED STONE OR GRAVEL COMPACTED IN 3" LIFTS ABOVE COMPACTED SOIL. GRAVEL SHALL BE NATURAL OR CRUSHED WITH 100% PASSING #1 SIEVE.
6. AS AN ALTERNATE TO ITEMS 2 AND 3, THE SUBGRADE SOILS WITH 5 PASSES OR A MEDIUM SIZED VIBRATORY PLATE COMPACTOR (SUCH AS BOMAG BPR 30/38) OR HAND–OPERATED SINGLE DRUM VIBRATORY ROLLER (SUCH AS BOMAG BW 55E). AND SOFT AREAS THAT ARE ENCOUNTERED SHOULD BE REMOVED AND REPLACED WITH A WELL–GRADED GRANULAR FILL AND COMPACTED AS STATED ABOVE.

COMPACTION EQUIPMENT NOTES:

1. HAND OPERATED DOUBLE DRUM, VIBRATORY ROLLER, VIBRATORY PLATE COMPACTOR (>200#) OR JUMPING JACK COMPACTOR.

CONSTRUCTION NOTES:

1. FIELD VERIFICATION:

   SUBCONTRACTOR SHALL FIELD VERIFY SCOPE OF WORK, ANTENNA PLATFORM LOCATION AND UTILITY TRENCHWORK.
2. COORDINATION OF WORK: SUBCONTRACTOR SHALL COORDINATE RF WORK AND PROCEDURES WITH CONTRACTOR.
3. CABLE LADDER RACK:

   CONTRACTOR SHALL FURNISH AND INSTALL CABLE LADDER RACK, CABLE TRAY AND/OR ICE BRIDGE, AND CONDUIT AS REQUIRED TO SUPPORT CABLES TO THE NEW BTS LOCATION.

LEGEND

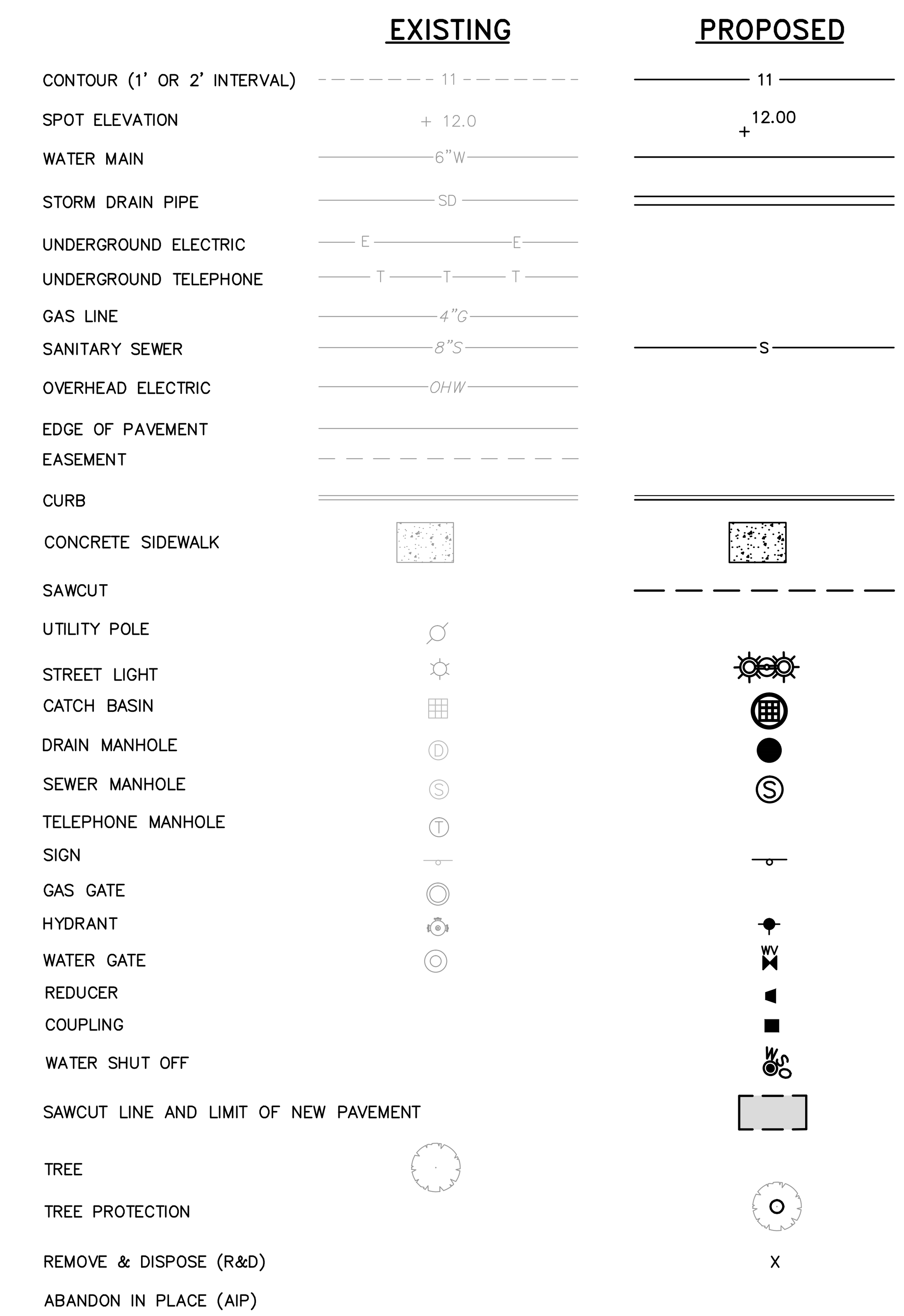

ABBREVIATIONS

ACI	AMERICAN CONCRETE INSTITUTE
ADJ.	ADJUSTABLE
AIP	ABANDON IN PLACE
ALUM.	ALUMINUM
APPROX.	APPROXIMATE
ASTM	AMERICAN SOCIETY OF TESTING MATERIALS
BIT.	BITUMINOUS
BLDG.	BUILDING
BOT	BOTTOM
C. to C.	CENTER TO CENTER
CB	CATCH BASIN
CDF	CONTROL DENSITY FILL
CIPP	CURED–IN–PLACE–PIPE LINING
CITS	CLEAN, INSPECT, TEST, & SEAL
℄	CENTER LINE
CMP	CORRUGATED METAL PIPE
CONC.	CONCRETE
CONT.	CONTINUOUS
CORR.	CORRUGATED
CR	CURB RETURN
CU	COPPER
CW	CROSS WALK
D	DRAIN
D.I.	DUCTILE IRON
DIA.	DIAMETER
ø	DIAMETER
DIAG.	DIAGONALLY
DMH	DRAIN MANHOLE
EA.	EACH
ELECT.	ELECTRICAL
ELEV. / EL.	ELEVATION
EX.	EXISTING
FEMA	FEDERAL EMERGENCY MANAGEMENT AGENCY
FM	FORCE MAIN
FRP	FIBERGLASS REINFORCED PLASTIC
FT.	FOOT
FTG.	FITTING
G	GAS
GALV.	GALVANIZED
H	HEIGHT
HDPE	HIGH DENSITY POLYETHYLENE
HOR.	HORIZONTAL
I.D.	INSIDE DIAMETER
INV. / I	INVERT
L	LENGTH
LB	POUND
LW / L.O.W.	LIMIT OF WORK
MAX.	MAXIMUM
MECH.	MECHANICAL
MFG.	MANUFACTURERS
MH	MANHOLE
MIN.	MINIMUM
MWRA	MASSACHUSETTS WATER RESOURCE AUTHORITY
NOM.	NOMINAL
OSHA	OCCUPATIONAL SAFETY AND HEALTH ADMINISTRATION
O.C.	ON CENTER
O.C.E.W.	ON CENTER EACH WAY
O.D.	OUTSIDE DIAMETER
PL	PROPERTY LINE
PSI	POUNDS PER SQUARE INCH
PVC	POLYVINYL CHLORIDE
R&D	REMOVE AND DISPOSE
RCP	REINFORCED CONCRETE PIPE
RRVGC	REMOVE AND RESET VERTICAL GRANITE CURB
R&S	REMOVE AND STACK
S	SEWER
S.S.	STAINLESS STEEL
SCH.	SCHEDULE
SECT.	SECTION
SF	SQUARE FEET
SHLDR.	SHOULDER
SHT.	SHEET
SQ.	SQUARE
TBM	TEMPORARY BENCH MARK
THK.	THICK
TYP.	TYPICAL
UGE	UNDERGROUND ELECTRIC
UGT	UNDERGROUND TELEPHONE
VERT.	VERTICAL
VGC	VERTICAL GRANITE CURB
W	WATER
W/	WITH

ISSUED FOR CONSTRUCTION

22x34 SHEET 1:1

WOODARD & CURRAN
1699 King Street, Suite 406
Enfield, Connecticut 06082
855.347.6788 | www.woodardcurran.com
COMMITMENT & INTEGRITY DRIVE RESULTS

THIS DOCUMENT IS THE PROPERTY OF WOODARD & CURRAN INC. AND ITS CLIENT. REPRODUCTION OR MODIFICATION WITHOUT WRITTEN PERMISSION IS PROHIBITED.

COMMONWEALTH OF MASSACHUSETTS
SCOTT J. MEDEIROS
CIVIL
NO. 41453
REGISTERED PROFESSIONAL ENGINEER
07-24-2015

REV	DESCRIPTION	DATE

DESIGNED BY: SJM/PJJ | CHECKED BY: SJM
DRAWN BY: JBC | 228949-G-001.DWG

GENERAL NOTES, LEGEND, AND ABBREVIATIONS

TOWN OF PLYMOUTH MASSACHUSETTS

COMMUNICATIONS TOWER

JOB NO.: 228949
DATE: JULY 2015
SCALE: NONE
SHEET: 2 OF 7

G-001

\\woodardcurran.net\Shared\Projects\228949 Plymouth MA - Communication Tower\wip\Drawings\GENERAL\228949-G-001.dwg, Jul 24, 2015 - 9:36am

22x34 SHEET
1:1

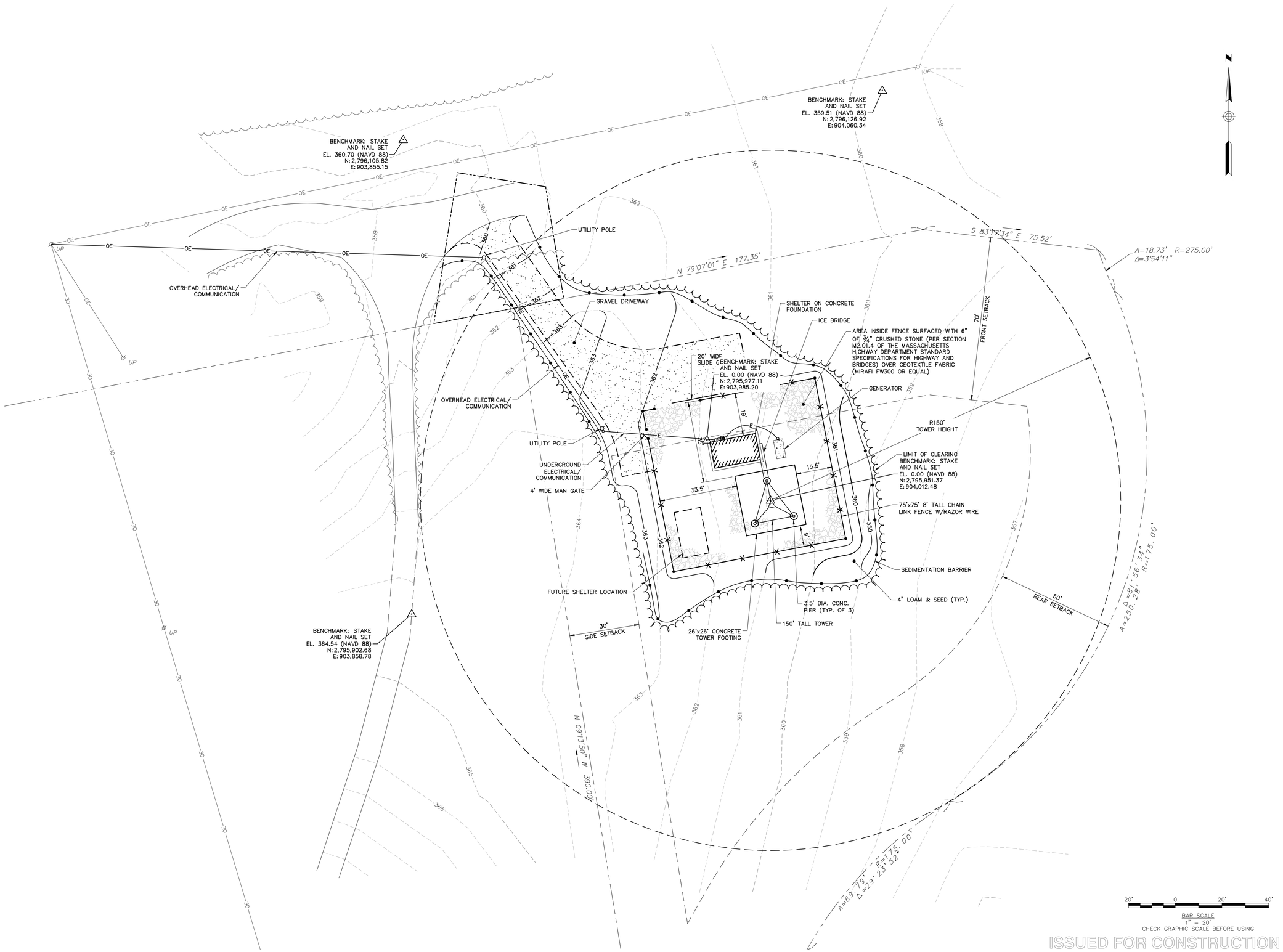

ISSUED FOR CONSTRUCTION

1699 King Street, Suite 406
Enfield, Connecticut 06082
855.347.6788 | www.woodardcurran.com
WOODARD & CURRAN

COMMITMENT & INTEGRITY DRIVE RESULTS

THIS DOCUMENT IS THE PROPERTY OF WOODARD & CURRAN INC. AND ITS CLIENT. THIS DOCUMENT OR ANY PART THEREOF MAY NOT BE REPRODUCED OR DISTRIBUTED WITHOUT WRITTEN PERMISSION.

COMMONWEALTH OF MASSACHUSETTS
STEVEN J. MOTT
No. 41453
REGISTERED PROFESSIONAL ENGINEER
07.24.2015

REV	DESCRIPTION	DATE

DESIGNED BY: SJM/PJJ
DRAWN BY: JBC
CHECKED BY: SJM
228949-C-200.DWG

COMMUNICATIONS TOWER SITE PLAN

TOWN OF PLYMOUTH
MASSACHUSETTS

COMMUNICATIONS TOWER

JOB NO.: 228949
DATE: JULY 2015
SCALE: AS NOTED
SHEET: 3 OF 7

C-200

\\woodardcurran.net\Shared\Projects\228949 Plymouth MA - Communication Tower\wip\Drawings\CIVIL\228949-C-200.dwg, Jul 24, 2015 - 9:36am

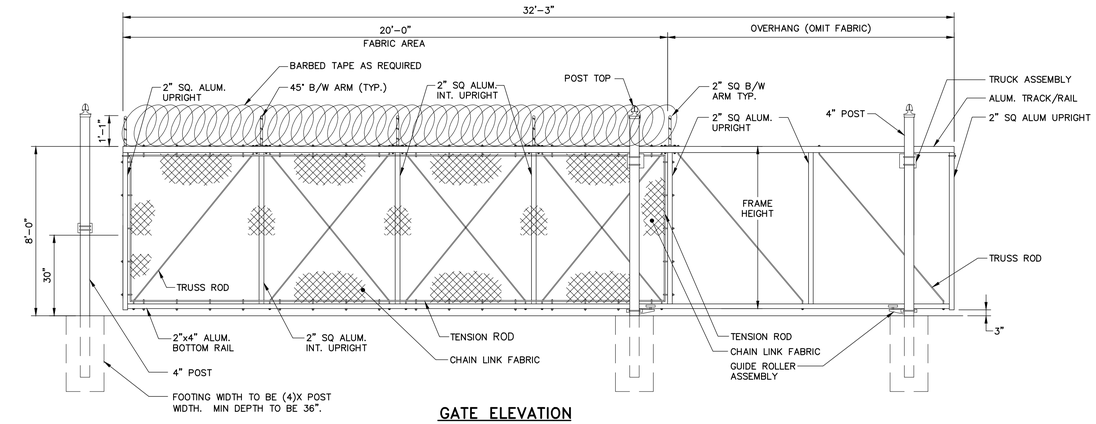

GATE ELEVATION

SINGLE CANTILEVERED SLIDING GATE

N.T.S.

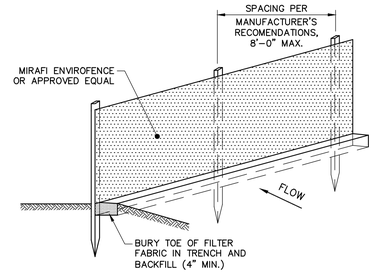

- INSTALL FABRIC ON UPHILL SIDE OF SUPPORT POSTS
- INSTALL SILT FENCE ACROSS SLOPES
- SILT FENCE SHALL NOT BE USED IN DRAINAGE WAYS

MAINTENANCE: INSPECT FOR TEARS IN THE FABRIC OR DAMAGE TO SUPPORTS. REPAIR AS NECESSARY. REMOVE ACCUMULATED SEDIMENT WHEN IT REACHES A DEPTH OF SIX-INCHES OR LESS.

REMOVAL: WHEN UPSLOPE AREAS ARE STABILIZED, THE STRUCTURE AND ANY ACCUMULATED SEDIMENT WILL BE REMOVED.

SILTATION FENCE DETAIL

NOT TO SCALE

1. ALL COMPONENTS SHALL BE INSTALLED PER MANUFACTURERS INSTRUCTIONS.
2. CONTRACTOR SHALL DETFRMINE REQUIRED QUANTITY OF ALL ICE BRIDGE COMPONENTS
3. SNAP-IN HANGERS, SPLICE KITS, HINGE KITS, EXTENSION KITS, STIFFENERS, AND OTHER MISCELLANEOUS HARDWARE SHALL BE PROVIDED BY THE CONTRACTOR AS REQUIRED.
4. ICE BRIDGE SHALL BE ROUTED TO ACCOMMODATE THE MINIMUM BENDING RADIUS OF THE COAXIAL CABLE.
5. ICE BRIDGE COMPONENTS SHOWN ARE SCHEMATIC. CONSULT MANUFACTURER FOR EXACT AND CURRENT SPECIFICATIONS.

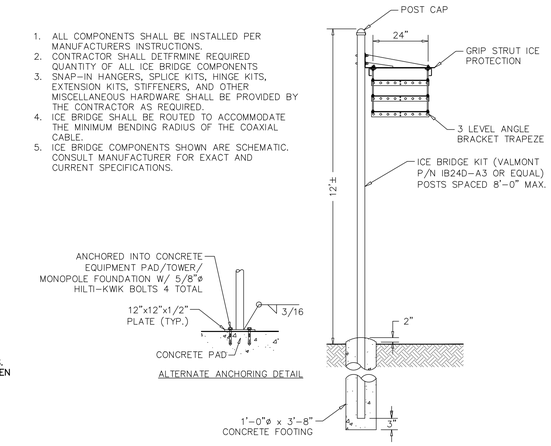

ICE BRIDGE DETAIL

NOT TO SCALE

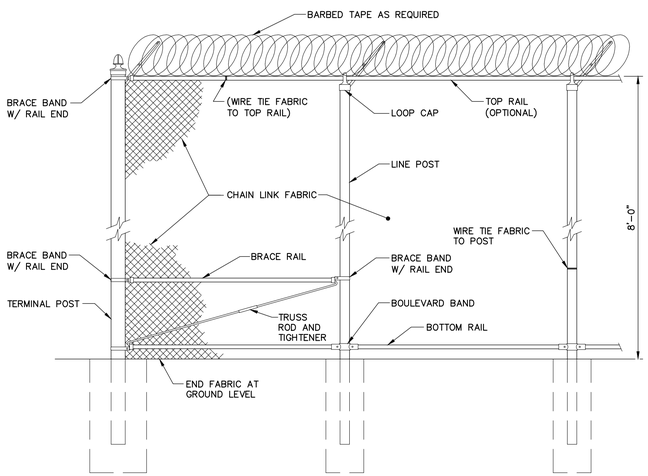

TYPICAL CHAIN LINK FENCE DETAIL

NOT TO SCALE

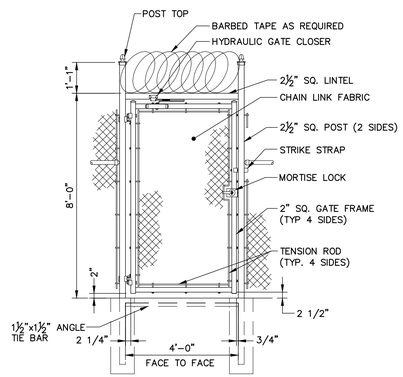

PEDESTRIAN SWING GATE

N.T.S.

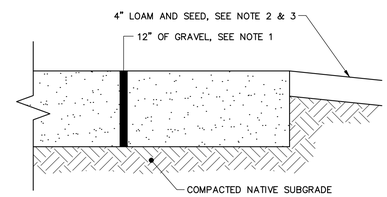

NOTES:

1. GRAVEL SHALL CONSIST OF HARD, DURABLE STONE MATERIAL FREE FROM LOAM AND CLAY, WELL-GRADED, AS PER SECTION M1.03.0 (TYPE B) OF THE MASSACHUSETTS HIGHWAY DEPARTMENT STANDARD SPECIFICATIONS FOR HIGHWAY AND BRIDGES.
2. LOAM BORROW SHALL CONFORM TO SECTION M1.05.0 OF THE MASSACHUSETTS HIGHWAY DEPARTMENT STANDARD SPECIFICATIONS FOR HIGHWAY AND BRIDGES.
3. SEED SHALL CONFORM TO SECTION M6.03.0 OF THE MASSACHUSETTS HIGHWAY DEPARTMENT STANDARD SPECIFICATIONS FOR HIGHWAY AND BRIDGES.

GRAVEL ACCES DRIVE DETAIL

NOT TO SCALE

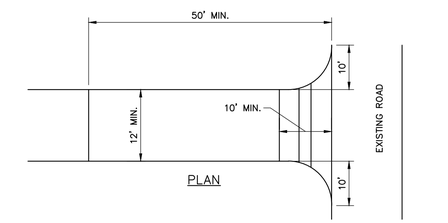

PLAN

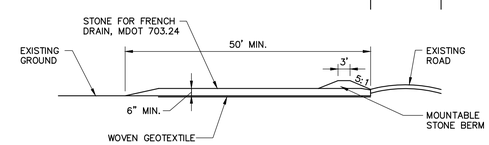

PROFILE

NOTES:

- CONSTRUCTION ENTRANCES MAY BE RELOCATED AS CONSTRUCTION PROGRESSES.
- WHEEL WASH PITS MAY ALSO BE USED, IF APPROVED.

MAINTENANCE: INSPECT FOR EFFECTIVE REMOVAL OF SOIL FROM VEHICLES PRIOR TO LEAVING THE SITE. SWEEP ANY SOIL FROM ADJACENT ROADWAYS.

REMOVAL: AT LEAST ONE CONSTRUCTION ENTRANCE SHALL BE MAINTAINED UNTIL ALL AREAS OF THE SITE ARE STABILIZED.

STABILIZED CONSTRUCTION ENTRANCE

NOT TO SCALE

ISSUED FOR CONSTRUCTION

1699 King Street, Suite 406
Enfield, Connecticut 06082
855.347.6788 | www.woodardcurran.com
COMMITMENT & INTEGRITY DRIVE RESULTS
WOODARD & CURRAN

THIS DOCUMENT IS THE PROPERTY OF WOODARD & CURRAN INC. AND THE CLIENT. THIS DOCUMENT OR THE INFORMATION CONTAINED HEREIN MAY NOT BE REPRODUCED WITHOUT WRITTEN PERMISSION.

COMMONWEALTH OF MASSACHUSETTS
SCOTT A. MORRIS
No. 41453
REGISTERED PROFESSIONAL ENGINEER
07.23.2015

REV	DESCRIPTION	DATE

DESIGNED BY: SJM/PJJ
DRAWN BY: JBC
CHECKED BY: SJM
228949-C-300.DWG

CIVIL DETAILS - 1

TOWN OF PLYMOUTH
MASSACHUSETTS

COMMUNICATIONS TOWER

JOB NO.: 228949
DATE: JULY 2015
SCALE: AS NOTED
SHEET: 4 OF 7

C-300

\\woodardcurran.net\Shared\Projects\228949 Plymouth MA - Communication Tower\wip\Drawings\CIVIL\228949-C-300.dwg, Jul 24, 2015 - 9:37am

22x34 SHEET
1:1

GENERAL

- P1-## — HOME RUN. ARROWS INDICATE NUMBER OF CIRCUITS, CROSS LINES INDICATE NUMBER OF WIRES, OTHER THAN TWO (2) PLUS BOND, WIRE SIZE NOT SHOWN INDICATES #12AWG MIN.
- INDICATES CIRCUIT NUMBER
- PANEL DESIGNATION
- WIRING IN RACEWAY
- WIRING IN RACEWAY CONCEALED UNDERGROUND OR UNDERSLAB, MINIMUM 3/4"C
- UC — WIRING IN RACEWAY CONCEALED UNDERGROUND, MINIMUM 3/4"C
- 3/C #nn W/GND
- EquipNo-P — CONDUIT AND CABLE ID TAG
- CONDUIT TURNING UP
- CONDUIT TURNING DOWN
- CONDUIT STUB
- EY CONDUIT SEAL
- FLEXIBLE NON-METALLIC CONDUIT
- PANELBOARD
- CP — CONTROL PANEL
- ATC — AUTOMATIC TEMPERATURE CONTROL PANEL
- ISBP — INTRINSIC SAFETY BARRIER PANEL
- POWER COMPANY METER
- HS — LOCAL SELECTOR SWITCH
  H/O/A — H/O/A – HAND/OFF/AUTO
  H/O/R – HAND/OFF/REMOTE
  L/O/R – LOCAL/OFF/REMOTE
- PUSHBUTTON STATION, WITH "EM" EMERGENCY
- J — JUNCTION BOX
- MD — MOTORIZED DAMPER
- T — THERMOSTAT
- R — RELAY
- BT — DOOR BELL/BUZZER AND TRANSFORMER – MTD CL UP 7'-0" AFF
- x-# — EQUIPMENT TAGS
  EQUIP#
- X — KEYED NOTE TAG
- X — REVISION TRIANGLE
- BRACKET

POWER

- NON-FUSED SAFETY SWITCH
- F — FUSED SAFETY SWITCH
- NON-FUSED DISCONNECT/MAGNETIC MOTOR STARTER
- M — MANUAL MOTOR SWITCH (MOTOR RATED SWITCH), TOGGLE OPERATED, SINGLE PHASE. 1 OR 2 POLE AS REQUIRED
- CB 100A — ENCLOSED CIRCUIT BREAKER W/AMPERE RATING
- M — ELECTRIC MOTOR, NUMBER INDICATES HORSEPOWER RATING, "F" INDICATES FRACTIONAL LESS THAN 1/20HP OR 100W
- T — TRANSFORMER
- P — POWER POLE
- DUPLEX RECEPTACLE, NEMA 5-20R – MTD CL UP 24" OR AS NOTED."WP" WEATHER PROOF, "G" PROTECTED BY GFCI RECEPTACLE OR BREAKER UPSTREAM, "H" MOUNTED 0'-6" BELOW CEILING, "TV" MOUNT 7'-6" UP
- DOUBLE DUPLEX RECEPTACLE, NEMA 5-20R – MTD CL UP 24" OR AS NOTED
- SINGLE RECEPTACLE, NEMA 5-20R – MTD CL UP 24" OR AS NOTED
- GFCI DUPLEX RECEPTACLE, NEMA 5-20R – MOUNTED CL UP 48" OR 6" ABOVE COUNTER
- DOUBLE DUPLEX GFCI RECEPTACLE, NEMA 5-20R – MOUNTED CL UP 48" OR 6" ABOVE COUNTER
- FLUSH FLOOR OUTLET, DUPLEX RECEPTACLE, NEMA 5-20R
- MULTI SERVICE FLUSH FLOOR BOX WITH DUPLEX RECEPTACLE AND PROVISIONS FOR DATA
- POWER RECEPTACLE, NEMA CONFIGURATION AS NOTED OR AS REQUIRED FOR EQUIPMENT SERVED.
- FLUSH CEILING MTD DEVICE BOXES, ONE W/ DUPLEX RCPT FOR PROJECTOR POWER AND ONE FOR DATA TO SERVE OH PROJECTOR. RUN ONE 1 1/2"C TO JBOX LOCATED AT FRONT OF ROOM FOR PROJECTOR CABLE PATHWAY. VERIFY FINAL LOCATION W/ OWNER PRIOR TO ROUGH IN.
- MULITI-OUTLET POWER STRIP, MOUNT 0'-6" ABOVE COUNTERTOP, RECEPTACLE SPACING AS NOTED.

MISCELLANEOUS

- B / 80.01 — DETAIL # / SECTION CALL OUT / SHEET #
- DETAIL TITLE — 1 / X-0X — DETAIL CALL OUT

LIGHTING

- 2x4 FLUORESCENT FIXTURE
- Ab — ASSOCIATED CONTROL DEVICE; FIXTURE TYPE (SEE LIGHT FIXTURE SCHEDULE)
- 1x4 FLUORESCENT FIXTURE
- 2x2 FLUORESCENT FIXTURE
- FIXTURE WIRED TO UNSWITCHED NORMAL CIRCUIT
- FIXTURE WIRED TO UNSWITCHED EMERGENCY CIRCUIT
- FIXTURE WIRED TO SWITCHED EMERGENCY CIRCUIT
- DOWN LIGHT
- FLUORESCENT STRIP
- WALL MOUNTED FIXTURES
- ab — POLE MOUNTED SITE LIGHTING FIXTURE; FIXTURE TYPE (SEE LIGHT FIXTURE SCHEDULE)
- FLOOD LIGHT
- EXIT SIGN, CEILING MOUNTED. ARROW INDICATES EGRESS DIRECTION. SHADING INDICATES SIGN FACE. NUMERAL INDICATES BATTERY UNIT CONNECTED
- EXIT SIGN, WALL MOUNTED 7'-6" AFF OR 0'-6" ABOVE DOOR. SHADING INDICATES SIGN FACE. NUMERAL INDICATES BATTERY UNIT CONNECTED TO.
- BATT — DUAL HEAD EMERGENCY LIGHT BATTERY PACK WITH NUMBER OF HEADS AS INDICATED – WALL MOUNTED MTD 7'-6" AFF. NUMERAL INDICATES BATTERY ID NUMBER.
- TANDEM EMERGENCY LIGHT BATTERY PACK & EXIT SIGN – WALL MOUNTED MTD 7'-6" AFF OR 0,-6" ABOVE DOOR. NUMERAL INDICATES BATTERY ID NUMBER.
- REMOTE EMERGENCY LIGHTING HEAD – WALL MOUNTED MTD 7'-6" AFF. NUMERAL INDICATES BATTERY UNIT CONNECTED TO.
- S — SINGLE POLE TOGGLE SWITCH – MTD CL UP 4'-0" AFF
- S_2 — DOUBLE POLE TOGGLE SWITCH – MTD CL UP 4'-0" AFF
- S_3 — 3-WAY TOGGLE SWITCH – MTD CL UP 4'-0" AFF
- S_4 — 4-WAY TOGGLE SWITCH – MTD CL UP 4'-0" AFF
- S_M — WALL MOUNTED OCCUPANCY SENSOR – MTD CL UP 4'-0" AFF
- S_P — TOGGLE SWITCH WITH PILOT LIGHT – MTD CL UP 4'-0" AFF
- S_D — DIMMER SWITCH – MTD CL UP 4'-0" AFF
- S_{LV} — LOW VOLTAGE SWITCH – MTD CL UP 4'-0" AFF
- a — OCCUPANCY SENSOR; a. INDICATES CONTROLLED FIXTURE
- PC — PHOTOCELL
- LC — LIGHTING CONTACTOR
- MS — MOTION SENSOR

FIRE ALARM DIAGRAM SYMBOLS

- FACP — FIRE ALARM CONTROL PANEL
- FAA — FIRE ALARM ANNUNCIATOR
- FCPS — FIELD CHARGER POWER SUPPLY
- M — FIRE ALARM MASTER BOX
- K — KNOX BOX
- F — FIRE ALARM MANUAL PULL STATION – WALL MTD CL UP 4'-0"
- H L — FIRE ALARM AUDIBLE/VISIBLE NOTIFICATION APPLIANCE CANDELA (CD) POWER PER NFPA 72 OR AS NOTED – WALL MTD BOTTOM UP 80" AFF. "H" HORN, "V" VOICE.
- L — FIRE ALARM VISUAL NOTIFICATION APPLIANCE CANDELA (CD) POWER PER NFPA 72 OR AS NOTED – WALL MTD BOTTOM UP 80" AFF
- CEILING MOUNTED SMOKE DETECTOR
- CEILING MOUNTED HEAT DETECTOR
- DUCT SMOKE DETECTOR S=SUPPLY, R=RETURN
- FS — SPRINKLER SYSTEM FLOW SWITCH
- TS — SPRINKLER SYSTEM TAMPER SWITCH
- PS — SPRINKLER SYSTEM PRESSURE SWITCH
- DH — FIRE ALARM SYSTEM MAGNETIC DOOR HOLDER
- Z — MONITOR MODULE
- C — CONTROL MODULE
- R — RELAY MODULE

COMMUNICATIONS

- TEL — TELEPHONE BACKBOARD
- wx — PROVISIONS FOR TELEPHONE OUTLET. TWO-GANG WALL BOX WITH ONE 1"C STUB TO ABOVE ACCESSIBLE CEILING – MTD CL UP SAME AS ASSOCIATED RECEPTACLE
  W-INDICATES WALL MOUNTED AT 60" AFF
  P-INDICATES PAYPHONE MOUNTED AT 4'-0" AFF
  X-INDCATES NUMBER OF JACKS, SINGLE BOX
- PROVISIONS FOR DATA OUTLET. TWO-GANG WALL BOX WITH ONE 1"C STUB TO ABOVE ACCESSIBLE CEILING – MTD CL UP SAME AS ASSOCIATED RECEPTACLE. SUBSCRIPTS AS NOTED ABOVE.
- 2D2T — PROVISIONS FOR TELEPHONE & DATA OUTLET. TWO-GANG WALL BOX WITH ONE 1"C STUB TO ABOVE ACCESSIBLE CEILING – MTD CL UP SAME AS ASSOCIATED RECEPTACLE. SUBSCRIPTS AS NOTED ABOVE.
- PROVISIONS FOR SCADA SYSTEM OUTLET. TWO-GANG WALL BOX WITH ONE 1"C STUB TO ABOVE ACCESSIBLE CEILING – MTD CL UP SAME AS ASSOCIATED RECEPTACLE
- CEILING MOUNTED TELEPHONE SYSTEM OUTLET
- CEILING MOUNTED DATA SYSTEM OUTLET
- CEILING MOUNTED VOICE & DATA OUTLET
- FLUSH TELEPHONE FLOOR OUTLET
- FLUSH DATA FLOOR OUTLET
- FLUSH VOICE & DATA FLOOR OUTLET
- TV — TELEVISION COAXIAL OUTLET. MOUNTED UP SAME AS ASSOCIATED RECEPTACLE

SECURITY

- SEC — SECURITY PANEL
- DS — DOOR INTRUSION SWITCH
- DE — ELECTRIC DOOR STRIKE
- CR — CARD READER
- KP — KEY PAD
- MOTION DETECTOR
- CAM — SECURITY CAMERA
  PTZ = PAN/TILT/ZOOM

INTERCOM & PAGING SYSTEM

- S — CEILING MOUNTED SPEAKER
- PA — PAGING SYSTEM CONTROL PANEL
- HS — PAGING SYSTEM HANDSET

INSTRUMENTATION

- LS / XX — FIELD MOUNTED INSTRUMENT; INSTRUMENT IDENTIFICATION TYPE; INSTRUMENT LOOP #
- FS / XX — VENDER SUPPLIED INSTRUMENT

INSTRUMENT IDENTIFIER:

AE	ANALYSIS ELEMENT
AIT	ANALYSIS INDICATING TRANSMITTER
AT	ANALYSIS TRANSMITTER
DPS	DIFFERENTIAL PRESSURE SWITCH
FCV	FLOW CONTROL VALVE
FE	FLOW ELEMENT
FIT	FLOW INDICATING TRANSMITTER
FT	FLOW TRANSMITTER
FS	FLOW SWITCH
LE	LEVEL ELEMENT
LIT	LEVEL INDICATING TRANSMITTER
LT	LEVEL TRANSMITTER
LS	LEVEL SWITCH
LSH	LEVEL SWITCH HIGH
LSL	LEVEL SWITCH LOW
MOV	MOTOR OPERATED VALVE
PE	PRESSURE ELEMENT
PIT	PRESSURE INDICATING TRANSMITTER
PT	PRESSURE TRANSMITTER
PS	PRESSURE SWITCH
SV	SOLENOID VALVE
TE	TEMPERATURE ELEMENT
TIT	TEMPERATURE INDICATING TRANSMITTER
TT	TEMPERATURE TRANSMITTER
ZS	PROXIMITY SWITCH

MISC TERMINALS

- ARROW, SMALL
- ARROW, LARGE
- ARROW, TRIANGULAR
- CONTINUE, SMALL
- CONTINUE, LARGE
- DOT, SMALL
- DOT, MEDIUM
- DOT, LARGE
- POLARITY SQUARE
- SCREW TERMINAL
- TERMINAL POINT, SMALL
- TERMINAL POINT, LARGE
- TERMINAL POINT, SQUARE
- SHIELD
- SHIELD W/TERMINAL POINT

ONE-LINE DIAGRAM SYMBOLS

- 52 / GCB1 — CB 800A E.O — 52
  HV VOLTAGE DRAWOUT TYPE POWER CIRCUIT BREAKER ELECTRICALLY OPERATED
  MV VOLTAGE DRAWOUT TYPE POWER CIRCUIT BREAKER WITH MANUAL CONTROL SWITCH
- AT / AF — EO
  LOW VOLTAGE CIRCUIT BREAKER
  AF – AMP FRAME
  AT – AMP TRIP
  EO – ELECTRICALLY OPERATED
- ST
  ST – SHUNT TRIP
  GF – GROUND FAULT
  EO – ELECTRICALLY OPERATED
- DISCONNECT, ISOLATION OR SAFETY SWITCH
- FUSED DISCONNECT SWITCH
- 1 — MAGNETIC MOTOR STARTER. NUMERAL INDICATES NEMA SIZE FVNR UNLESS OTHERWISE NOTED.
  FVR – FULL VOLTAGE REVERSING
  RVAT – REDUCING VOLTAGE AUTO TRANSFORMER
  2S – TWO SPEED
  YD – WYE DELTA REDUCED VOLTAGE STARTER
- CAPACITOR
- VFD 11 — VFD = VARIABLE FREQUENCY DRIVE
  SS = SOLID STATE STARTER
  DC = DC VARIABLE DRIVE
  NUMERAL INDICATES AMP RATING
- OA — POWER TRANSFORMER
  OA – LIQUID TYPE SELF COOLED
  AA – DRY TYPE SELF COOLED
  FA – FAN COOLED
  CONNECTION
- 2 — 480/120 — POTENTIAL TRANSFORMER
  RATIO
  NUMBER REQUIRED
- 2 — 600/5 — CURRENT TRANSFORMER
  RATIO
  PHASE
- 5 — MOTOR, NUMERAL INDICATES HORSEPOWER
- X — GENERAL LOAD, NUMERAL INDICATES LOAD IN KVA
- GENERATOR
- N E L ATS — ATS – AUTOMATIC TRANSFER SWITCH
  MTS – MANUAL TRANSFER SWITCH
- A — METER
  A – AMMETER
  V – VOLTMETER
  W – WATTMETER
  KWH – KILOWATT HOUR
  KVAR – KILOVAR METER
  VAR – VAR METER
  HZ – FREQUENCY METER
  PF – POWER FACTOR METER
- 3 — LINE OR LOAD REACTOR
  NUMERAL INDICATES %
  IMPENDENCE
- DPM — DIGITAL POWER MONITOR
- AS — METER TRANSFER SWITCH
  AS – AMMETER SWITCH
  VS – VOLTMETER SWITCH
- SPD — SPD = SURGE PROTECTION DEVICE
  ENDN = ETHERNET TO DEVICENET LINKING DEVICE
  DPS = DEVICENET POWER SUPPLY
- MEDIUM VOLTAGE CABLE TERMINATION
- DRAWOUT DEVICE
- LA — LIGHTNING ARRESTOR
- K — KEY INTERLOCK

GROUNDING

- G — DENOTES BARE COPPER GROUND CABLE. (SIZE 4/0 UNLESS OTHERWISE NOTED)
- DENOTES 3/4ø X 10'-0" LONG GROUND ROD. (10'-0" MINIMUM LENGTH)
- DENOTES EQUIPMENT BOLTED CONNECTION OR APPROVED EQUAL.
- DENOTED CADWELL EXOTHERMIC CONNECTION
- GROUND

CONTROL DIAGRAM SYMBOLS

NOTE: ALL CONTROL SYMBOLS ARE DRAWN ASSUMING DE-ENERGIZED CIRCUITS, EMPTY TANKS, UNPRESSURIZED LINES, ETC.

OPEN ON INCREASE	CLOSE ON INCREASE	
		PRESSURE SWITCH
		LEVEL SWITCH
		FLOW SWITCH
		TEMPERATURE SWITCH
NORMALLY CLOSED	NORMALLY OPEN	
		PUSH BUTTON
	CO	INSTANTANEOUS CONTACT
		TIMED CLOSE CONTACT
		TIMED OPEN CONTACT
		LIMIT SWITCH

- H O A / XOO / OOX — SELECTOR SWITCH: QUANTITY OF ARROWS INDICATES NUMBER OF POSITIONS. XOO INDICATES UPPER CONTACT CLOSED IN LEFT POSITION AND OPEN IN CENTER AND RIGHT POSITIONS
- INTERNAL WIRING
- FIELD WIRING
- RELAY COIL

ABBREVIATIONS

A,AMP	AMPERES
AC	ALTERNATING CURRENT
AFF	ABOVE FINISHED FLOOR
AFG	ABOVE FINISHED GRADE
AHJ	AUTHORITY HAVING JURISDICTION
AIC	AMPERE INTERRUPT CAPACITY
AWG	AMERICAN WIRE GAUGE
BFG	BELOW FINISHED GRADE
CATV	CABLE TELEVISION
CB	CIRCUIT BREAKER
CCTV	CLOSED CIRCUIT TELEVISION
CL	CENTER LINE
CKT	CIRCUIT
CP	CONTROL PANEL
CT	CURRENT TRANSFORMER
CU	COPPER
E.C.	ELECTRICAL CONTRACTOR
EMT	ELECTRIC METALLIC TUBING
FAA	FIRE ALARM ANNUNCIATOR
FACP	FIRE ALARM CONTROL PANEL
FBO	FURNISHED BY OTHERS
FWE	FURNISHED WITH EQUIPMENT
G.C.	GENERAL CONTRACTOR
GEN	GENERATOR
GFCI	GROUND FAULT CIRCUIT INTERRUPTER
G,GND	GROUND
HP	HORSEPOWER
HZ	FREQUENCY IN CYCLES/SECOND
IG	ISOLATED GROUND
IMT	INTERMEDIATE METALLIC CONDUIT
JBOX	JUNCTION BOX
K	KILO
KCMIL	1000 CIRCULAR MILS
KVA	KILOVOLT AMPERE
KVAR	KILOVOLT AMPERE REACTIVE
KW	KILOWATT
KWH	KILOWATT HOUR
MCC	MOTOR CONTROL CENTER
MCB	MAIN CIRCUIT BREAKER
MFG	MANUFACTURER
MH	MANHOLE
MLO	MAIN LUGS ONLY
MTD	MOUNTED
MTR	MOTOR
NC	NORMALLY CLOSED
NEC	NATIONAL ELECTRIC CODE
NEUT	NEUTRAL
NO	NORMALLY OPEN
OL	OVERLOAD ELEMENT
PF	POWER FACTOR
PH	PHASE
PRI	PRIMARY
PVC	POLYVINYL CHLORIDE
RGS	RIGID STEEL CONDUIT
RTD	RESISTANCE TEMPERATURE DETECTOR
SEC	SECONDARY
SS	STAINLESS STEEL
SV	SOLENOID VALVE
TEMP	TEMPERATURE
TVSS	TRANSIENT VOLTAGE SURGE SUPPRESSOR
TYP	TYPICAL
UE	UNDERGROUND ELECTRIC
UG	UNDERGROUND
V	VOLTS
VA	VOLT-AMPERES
VAR	VOLT-AMPERE REACTIVE
W	WATT
WM	WATT METER
WP	WEATHER PROOF
XFMR	TRANSFORMER
XP	EXPLOSION PROOF

ISSUED FOR CONSTRUCTION

WOODARD & CURRAN
1699 King Street, Suite 406
Enfield, Connecticut 06082
855.347.6788 | www.woodardcurran.com
COMMITMENT & INTEGRITY DRIVE RESULTS

THIS DOCUMENT IS THE PROPERTY OF WOODARD & CURRAN INC. AND ITS CLIENT. REPRODUCTION OR TRANSFER TO THIRD PARTIES WITHOUT WRITTEN CONSENT IS PROHIBITED.

COMMONWEALTH OF MASSACHUSETTS
ANDREW FITZPATRICK
ELECTRICAL
NO. 50825
REGISTERED PROFESSIONAL ENGINEER
7-24-15

REV	DESCRIPTION	DATE

DESIGNED BY: PFH
DRAWN BY: PFH
CHECKED BY: AJF
228949-E00.01.DWG

ELECTRICAL LEGEND

TOWN OF PLYMOUTH
MASSACHUSETTS

COMMUNICATIONS TOWER

JOB NO.: 228949
DATE: JULY 2015
SCALE: AS NOTED
SHEET: 5 OF 7

E00.01

\\woodardcurran.net\Shared\Projects\228949 Plymouth MA - Communication Tower\wip\Drawings\ELECTRICAL\228949-E00.01.dwg, Jul 24, 2015 - 9:37am

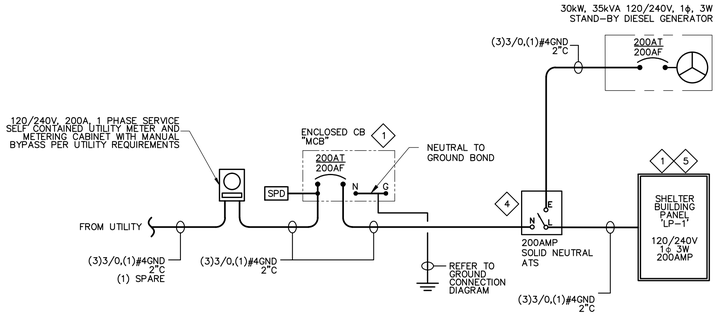

ELECTRICAL RISER DIAGRAM

SCALE: N.T.S.

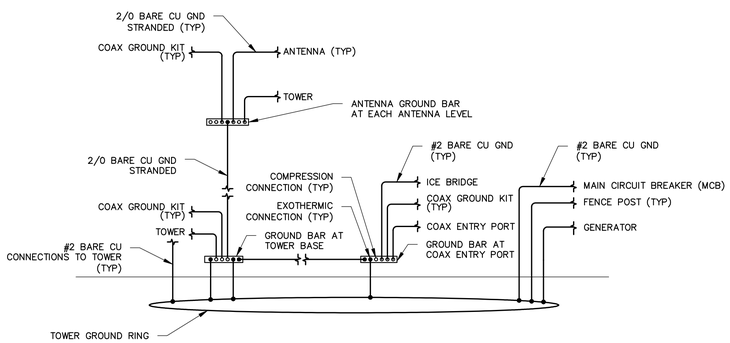

GROUND CONNECTION DIAGRAM

SCALE: N.T.S.

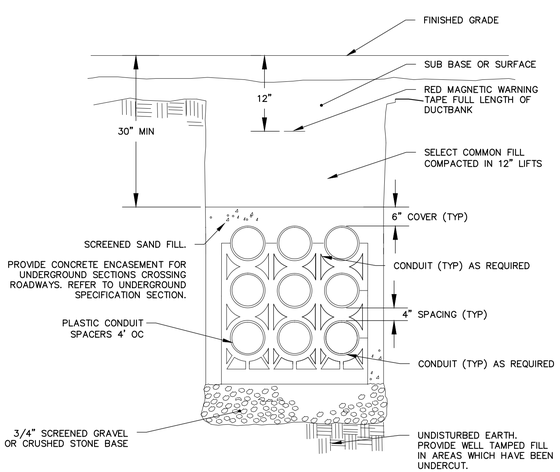

TYPICAL SAND ENCASED UNDERGROUND DUCT BANK DETAIL

1

SCALE: N.T.S.

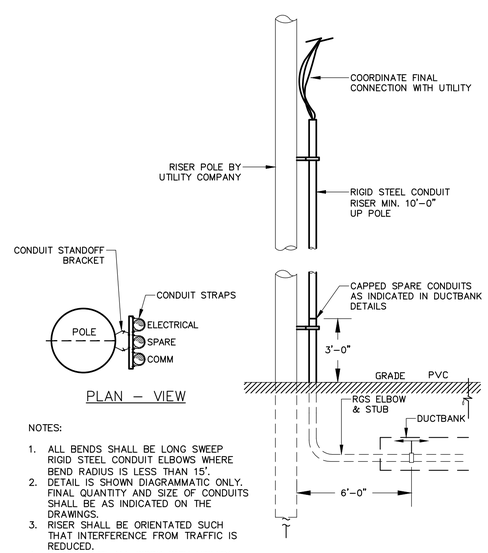

NOTES:

1. ALL BENDS SHALL BE LONG SWEEP RIGID STEEL CONDUIT ELBOWS WHERE BEND RADIUS IS LESS THAN 15'.
2. DETAIL IS SHOWN DIAGRAMMATIC ONLY. FINAL QUANTITY AND SIZE OF CONDUITS SHALL BE AS INDICATED ON THE DRAWINGS.
3. RISER SHALL BE ORIENTATED SUCH THAT INTERFERENCE FROM TRAFFIC IS REDUCED.
4. COORDINATE ALL WORK WITH UTILITY REQUIREMENTS.

RISER POLE DETAIL

2

SCALE: N.T.S.

GENERAL NOTES:

1. PROVIDE GROUND RING WITH MINIMUM OF #2 AWG BARE SOFT DRAWN STRANDED CU. BURY GROUND RING MINIMUM OF 36" BELOW GRADE.
2. PROVIDE #2 AWG BARE SOFT DRAWN STRANDED CU GROUND TO BUILDING AND TOWER COLUMNS AS SHOWN ON DRAWING. INSTALL GROUND CONDUCTOR IN PVC CONDUIT FOR ALL PENETRATIONS THROUGH FLOOR SLAB AND FOUNDATION. (TYP FOR ALL COLUMN CONNECTIONS SHOWN)
3. UTILIZE VENDOR FURNISHED BOLTED GROUND CONNECTION TABS TO TOWER COLUMNS IN LOCATIONS INDICATED ON DRAWING. (TYP FOR ALL COLUMN CONNECTIONS SHOWN)
4. ENSURE ALL GROUNDING ELECTRODE CONDUCTORS DO NOT HAVE ANY 90 DEGREE BENDS. BEND RADIUS SHALL BE 8 INCHES MINIMUM.
5. GROUNDING REQUIREMENTS SHOWN ON SITE PLAN ARE DIAGRAMMATIC. REFER TO GROUNDING RISER DIAGRAM FOR ENTIRETY OF GROUND CONNECTIONS.

KEYED NOTES:

1. ELECTRICAL EQUIPMENT FURNISHED BY OTHERS, INSTALLED BY CONTRACTOR.
2. FINAL LOCATION OF COAX ANTENNA CABLE SHIELD GROUND KITS SHALL BE COORDINATED WITH OWNER & ENGINEER.
3. COORDINATE FINAL STUB UP LOCATION WITH VENDOR DOCUMENTATION.
4. PROVIDE 4#14 IN A 3/4"C FROM AUTOMATIC TRANSFER SWITCH TO THE GENERATOR CONTROL PANEL FOR START/STOP FUNCTIONALITY. COORDINATE WITH VENDOR FOR FINAL CONNECTION REQUIREMENTS.
5. PROVIDE 20A CIRCUIT BREAKER IN 'LP1' FOR GENERATOR BLOCK HEATER AND CONTROL PANEL. BREAKER SHALL MATCH EXISTING MAKE AND MODEL OF 'LP1'.
6. SHELTER BUILDING BRANCH CIRCUIT WIRING, GROUNDING, RACEWAYS, WIRING DEVICES, LIGHTING AND HARDWARE PROVIDED BY OTHERS.
7. PROVIDE 4" CONDUIT FROM UTILITY RISER POLE TO BUILDING FOR COMMUNICATIONS. COORDINATE CABLE REQUIREMENTS WITH UTILITY, OWNER AND ENGINEER.

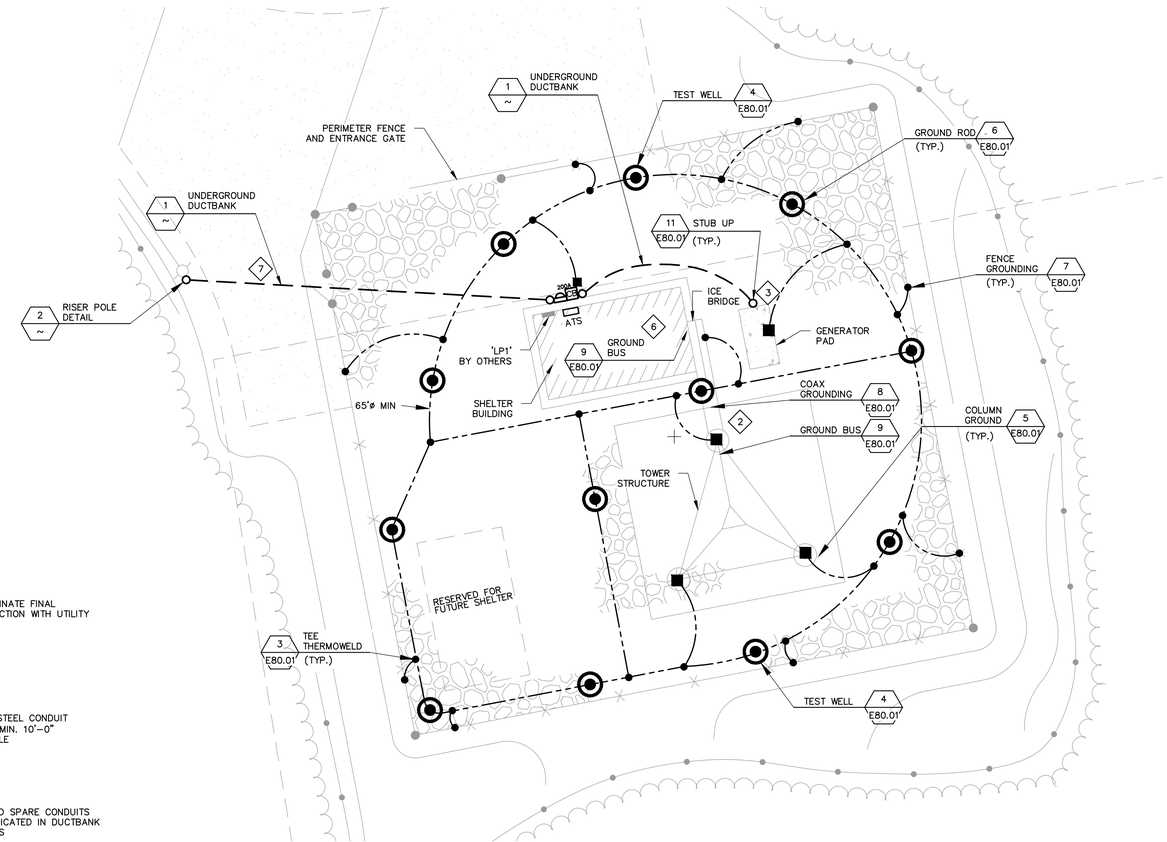

ELECTRICAL SITE PLAN

SCALE: 1"=10'

10' 0 10' 20'

BAR SCALE
1" = 10'
CHECK GRAPHIC SCALE BEFORE USING

ISSUED FOR CONSTRUCTION

1699 King Street, Suite 406
Enfield, Connecticut 06082
855.347.6788 | www.woodardcurran.com
WOODARD & CURRAN
COMMITMENT & INTEGRITY DRIVE RESULTS

THIS DOCUMENT IS THE PROPERTY OF WOODARD & CURRAN INC. AND ITS CLIENT. REPRODUCTION OR MODIFICATION WITHOUT WRITTEN PERMISSION IS PROHIBITED.

COMMONWEALTH OF MASSACHUSETTS
ANDREW FITZPATRICK
ELECTRICAL
NO. 50575
REGISTERED PROFESSIONAL ENGINEER
7-24-15

REV	DESCRIPTION	DATE

DESIGNED BY: PFH
DRAWN BY: PFH
CHECKED BY: AJF
228949-E05.01.DWG

ELECTRICAL POWER AND GROUNDING DIAGRAMS, SITE PLAN AND DETAILS

TOWN OF PLYMOUTH
MASSACHUSETTS

COMMUNICATIONS TOWER

JOB NO.: 228949
DATE: JULY 2015
SCALE: AS NOTED
SHEET: 6 OF 7

E05.01

\\woodardcurran.net\Shared\Projects\228949 Plymouth MA - Communication Tower\wip\Drawings\ELECTRICAL\228949-E05.01.dwg, Jul 24, 2015 - 9:37am

22x34 SHEET
1:1

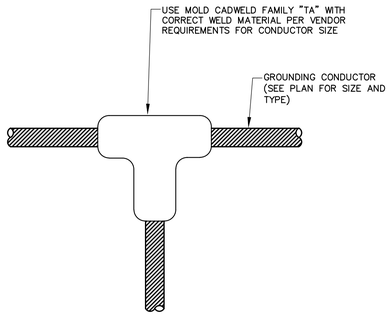

3 E05.01 TEE THERMOWELD CONNECTION
SCALE: N.T.S.

NOTES:

1. INSPECTION WELLS IN ROADWAYS SHALL ADHERE TO AASHTO H20 LOADING REQUIREMENTS.
2. WELLS SHALL BE FLUSH TYPE PRECAST CONCRETE, OR POLYMER CONCRETE PER AREA OF INSTALLATION. PROVIDE BOLTED DOWN COVERS WITH DESCRIPTION "GROUND ROD". PROVIDE STEEL COVERS FOR WELLS IN TRAFFIC AREAS.

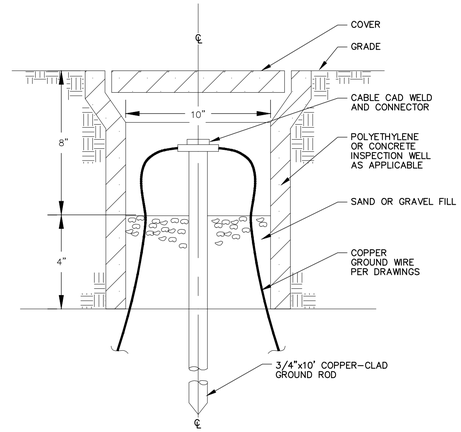

4 E05.01 TEST WELL INSTALLATION
SCALE: N.T.S.

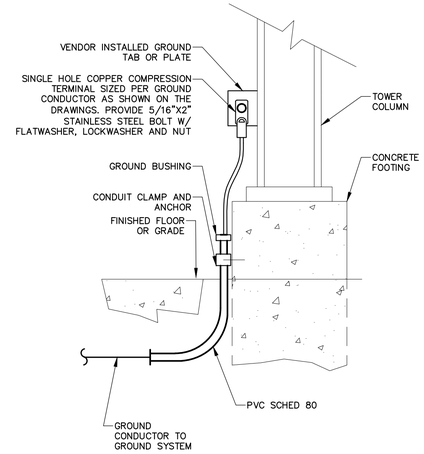

5 E05.01 COLUMN GROUND INSTALLATION
SCALE: N.T.S.

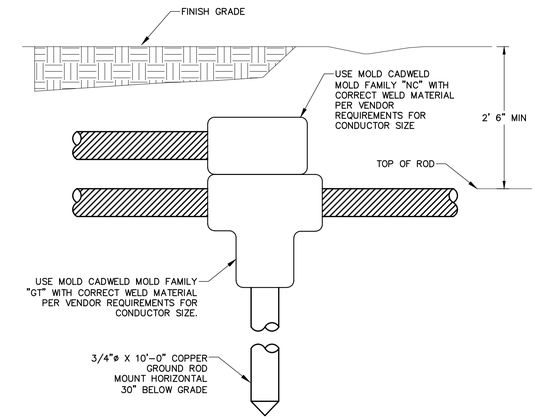

6 E05.01 GROUND ROD INSTALLATION
SCALE: N.T.S.

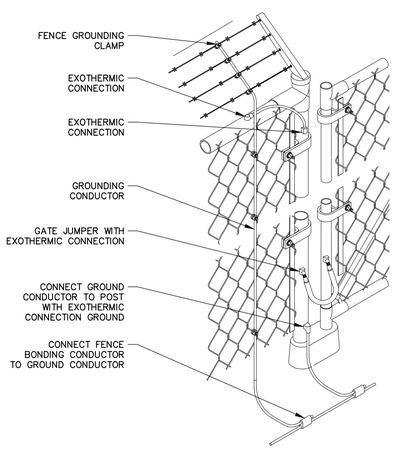

7 E05.01 TYPICAL FENCE & GATE BONDING DETAIL
SCALE: N.T.S.

NOTES:

1. DO NOT INSTALL CABLE GROUND KIT AT A BEND AND ALWAYS DIRECT GROUND WIRE DOWN TO GROUND BAR.
2. GROUNDING KIT SHOULD BE TYPE AND PART NUMBER AS SUPPLIED OR RECOMMENDED BY CABLE MANUFACTURER.
3. WEATHER PROOFING SHALL BE TWO-PART TAPE SUPPLIED WITH KIT. COLD SHRINK SHALL NOT BE USED.

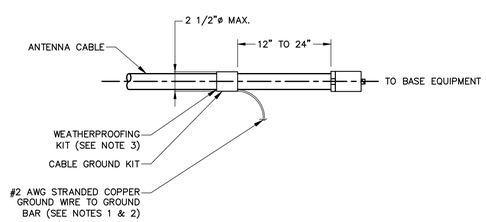

8 E05.01 COAX GROUND KIT DETAIL
SCALE: N.T.S.

NOTES:

1. PROVIDE 1/4"x4"x24" SOLID COPPER GROUND BAR WITH INSULATORS AND BRACKETS.
2. PROVIDE EXOTHERMIC WELD CONNECTION TO GROUND SYSTEM.
3. EXPOSED GROUND CONDUCTOR SHALL BE INSTALLED IN PVC CONDUIT.
4. REFER TO GROUND DIAGRAM FOR DOWN CONDUCTOR SIZING.

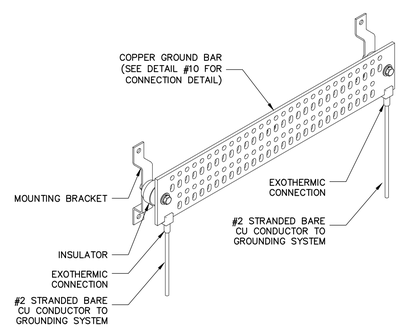

9 E05.01 GROUND BAR
SCALE: N.T.S.

NOTES:

1. "DOUBLING UP" OR "STACKING" OF CONNECTIONS IS NOT PERMITTED.
2. OXIDE INHIBITING COMPOUND TO BE USED AT ALL LOCATIONS.
3. DOWNLEADS FROM GROUND BUS BARS SHALL BE EXOTHERMIC WELDS.

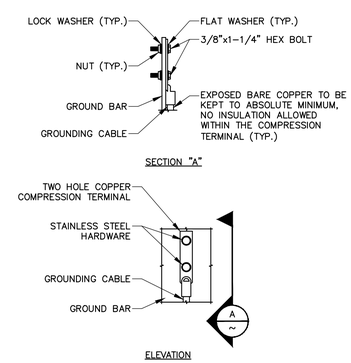

10 ~ GROUND BAR CONNECTION
SCALE: N.T.S.

NOTES:

1. APPLICABLE IN ALL AREA UNLESS NOTED OTHERWISE

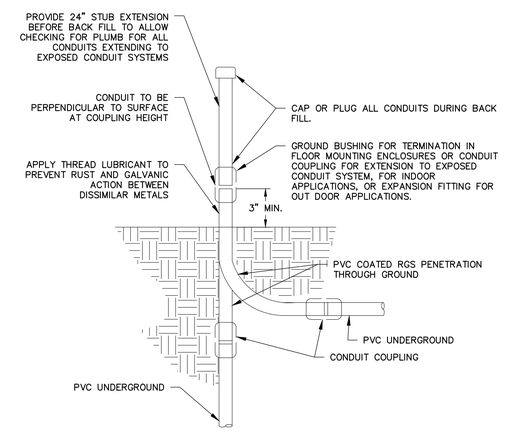

11 E05.01 CONDUIT STUB-UP/UNDERGROUND PENETRATION DETAIL
SCALE: N.T.S.

ISSUED FOR CONSTRUCTION

WOODARD & CURRAN
1699 King Street, Suite 406
Enfield, Connecticut 06082
855.347.6788 | www.woodardcurran.com
COMMITMENT & INTEGRITY DRIVE RESULTS

THIS DOCUMENT IS THE PROPERTY OF WOODARD & CURRAN INC. AND ITS CLIENT. REPRODUCTION OR MODIFICATION WITHOUT WRITTEN PERMISSION IS PROHIBITED.

MASSACHUSETTS ANDREW FITZPATRICK ELECTRICAL NO. 50258 REGISTERED PROFESSIONAL ENGINEER
2-4-2015

REV	DESCRIPTION	DATE

DESIGNED BY: PFH
DRAWN BY: SAA
CHECKED BY: AJF
228949-E80.01.DWG

ELECTRICAL DETAILS SHEET

TOWN OF PLYMOUTH MASSACHUSETTS

COMMUNICATIONS TOWER

JOB NO.: 228949
DATE: JULY 2015
SCALE: AS NOTED
SHEET: 7 OF 7

E80.01

\\woodardcurran.net\Shared\Projects\228949 Plymouth MA - Communication Tower\wip\Drawings\ELECTRICAL\228949-E80.01.dwg, Jul 24, 2015 - 9:37am