BUILDING EXTERIOR
☒ MOCHA
☐ OZARK
☐ GREY
☐ OTHER_____

LAST REVISED:	REVISION NUMBER:
4/8/15	0

FOR SIGNATURE OR STAMPED APPROVAL:

PROJECT
METRO AREA PLANNING COUNCIL
JOB NO.
1401-39
SITE NAME
PLYMOUTH, MA
SIZE
11'-6"W. OD X 20'L. OD X 9'H. ID

DRAWING TITLE	DRAWING NUMBER
DRAWING INDEX	AGB9370 PAGE 1 OF 9
NOTES SHEET	AGB9370 PAGE 2 OF 9
BILL OF MATERIALS	AGB9370 PAGE 3 OF 9
INTERIOR LAYOUTS	AGB9370 PAGE 4 OF 9
ELEVATION VIEWS	AGB9370 PAGE 5 OF 9
ELECTRICAL PANEL	AGB9370 PAGE 6 OF 9
BUILDING CONSTRUCTION DETAILS	AGB9370 PAGE 7 OF 9
BUILDING CONSTRUCTION DETAILS	AGB9370 PAGE 8 OF 9
BUILDING CONSTRUCTION DETAILS	AGB9370 PAGE 9 OF 9
BUILDING SKID ASSEMBLY	15B1220 PAGE 1 OF 1
BUILDING FOUNDATION ASSEMBLY	S15B1220 PAGE 1 OF 1

COMMONWEALTH OF MASSACHUSETTS
MICHAEL T. DE BOER
No. 40948
REGISTERED PROFESSIONAL ENGINEER
4-10-15

THIS DRAWING CONTAINS PROPRIETARY INFORMATION OF THERMOBOND BUILDINGS, LLC. IT IS INTENDED SOLELY FOR THE INFORMATION AND USE OF PARTIES OPERATING AND MAINTAINING THE EQUIPMENT DESCRIBED HEREIN AND MAY NOT BE USED, REPRODUCED OR DISCLOSED TO ANY OTHER PARTIES FOR ANY OTHER PURPOSE WITHOUT THE EXPRESSED WRITTEN PERMISSION OF THERMOBOND BUILDINGS, LLC.

USAGE	UNMANNED SHELTER
CONSTRUCTION TYPE	VB
OCCUPANCY GROUP	S-2
STORIES	1
BASIC WIND SPEED	100 MPH 3 SEC GUST
FLOOR LOAD	200 PSF
ROOF LOAD	70 PSF
FLOOR AREA	230 SQ.FT.
BUILDING HEIGHT	10'-10"
SEISMIC DESIGN	CAT D
WIND EXPOSURE	CAT C

THERMOBOND BUILDINGS
209 N. Court P.O. Box 445, Elk Point, SD. 57025-0445
Phone: 605-356-2090, www.thermobond.com

Scale: NONE	Title: DRAWING INDEX	
Date: 4/8/15		
Drawn By: NRS		
PROJECT NUMBER: 1401-39	PROJECT NAME: METRO AREA PLANNING COUNCIL	Drawing Number: AGB9370 PAGE 1 OF 9

ITEMS SHIPPED LOOSE

1. HOLD DOWN PLATES, WASHERS, AND NUTS

CONSTRUCTION NOTES

1. FLOOR TO HAVE 2X4 JOISTS ON 16" CENTERS
2. FLOOR TO HAVE R-11 FIBERGLASS INSULATION
3. WALLS TO HAVE 2X4 STUDS ON 16" CENTERS
4. WALLS TO HAVE R-11 FIBERGLASS INSULATION
5. ROOF TO HAVE 2X10 JOISTS ON 16" CENTERS
6. ROOF TO HAVE R-19 FIBERGLASS INSULATION
7. ROOF TO BE CDX PLYWOOD
8. PERIMETER SKID TO BE PAINTED WITH BROWN RUST PREVENTATIVE PAINT

REVISION LOG

DATE	DRAFTER	REVISION

ELECTRICAL NOTES

1. ALL WIRING SHALL BE IN ACCORDANCE WITH THE 2008 NATIONAL ELECTRIC CODE.
2. ALL ELECTRICAL MATERIALS SHALL BE U.L. LISTED AND CLASSIFIED AS SUITABLE FOR THE PURPOSE SPECIFIED.
3. ALL WIRING SHALL BE SURFACE MOUNTED IN A RACEWAY OR EMT CONDUIT USING APPROVED CONNECTORS, COUPLINGS, AND CLAMPS, ALL CONDUIT SHALL BE ANCHORED IN PLACE AT APPROXIMATELY EVERY 4 FT.
4. ALL WIRING SHALL BE A SOLID CONDUCTOR, THHN OR THWN COPPER, NO SMALLER THAN A #12.
5. ALL WIRE RUNS SHALL BE CONTINUOUS.
6. LOW VOLTAGE WIRE MAY BE STRANDED.
7. ALL WIRING SHALL BE TESTED AND INSPECTED PRIOR TO SHIPMENT.
8. GREEN GROUND CONDUCTORS SHALL BE RUN TO ALL OF THE BUILDINGS A/C POWERED DEVICES. CONDUIT SHALL NOT BE USED AS THE SOLE SOURCE OF GROUND.
9. ALL ALARM DEVICES WIRING SHALL BE RUN IN ITS OWN CONDUIT TO THE ALARM CABINET.
10. ELECTRICAL CONDUIT COUPLERS WILL BE **COMPRESSION** TYPE FITTINGS.

INTEGRATION NOTES

1. BONDED HALO:
   - HALO TO BE BARE STRANDED #2 AWG.
   - HALO WILL HAVE A 4" SPARK GAP INSTALLED OPPOSITE THE ENTRANCE PORT.
   - LADDER RACK SECTIONS TO BE BONDED WITH #6 JUMPERS & BONDED TO MGB.
   - METALLIC PANELS LARGER IN SIZE THAN A 4"X4" OUTLET BOX, DOOR FRAMES & HVAC GRILLES WILL BE BONDED TO THE PERIMETER HALO GROUND WITH A GREEN #6 WIRE, C-TAP AND WITH A TWO HOLE LUG.
2. CABLE LADDER TO BE MOUNTED AT 7'-4" A.F.F.

THIS DRAWING CONTAINS PROPRIETARY INFORMATION OF THERMOBOND BUILDINGS, LLC. IT IS INTENDED SOLELY FOR THE INFORMATION AND USE OF PARTIES OPERATING AND MAINTAINING THE EQUIPMENT DESCRIBED HEREIN AND MAY NOT BE USED, REPRODUCED OR DISCLOSED TO ANY OTHER PARTIES FOR ANY OTHER PURPOSE WITHOUT THE EXPRESSED WRITTEN PERMISSION OF THERMOBOND BUILDINGS, LLC.

THERMOBOND BUILDINGS
209 N. Court P.O. Box 445, Elk Point, SD. 57025-0445
Phone: 605-356-2090, www.thermobond.com

Scale: *NONE*	Title: *NOTES SHEET*	
Date: *4/8/15*		
Drawn By: *NRS*		
PROJECT NUMBER: *1401-39*	PROJECT NAME: *METRO AREA PLANNING COUNCIL*	Drawing Number: *AGB9370*

BUILDING BILL OF MATERIALS			
PRINT #	TBB #	DESCRIPTION	QUANTITY
1	099-0067	Plyco 24BZST3070, Bronze, RH Outswing, 36"x 84"	1
	099-0007	Passage Knob Schlage	1
	099-0006	Deadbolt (Schlage)	1
2	399-0020	Black Manual Wall Pack CP9000-08	1
3	199-079	BOM 8-4" Entrance Panel B576	1
4	800-100	BOM Exterior GFI Kit	1
5	500-103	BOM Light Switch Single	1
6	200-152	BOM 200A 40P Sq D Panel QO140M200	1
7	100-0083	Master Controller MC4000	1
8	899-040	BOM,Air Conditioner, Bard 2 ton w/ 5KW, 208/230V. 1 P W24A1-A05XPXXXJ	2
9	500-100	BOM Light Fixture 4'	6
10	500-107	BOM Light, 100W Exterior w/ photo cell	1
11	800-101	BOM Receptacle Duplex Kit 20A	8
12	200-177	BOM 200A Breaker Service Disconnect Sq D Outdoor	1
13	300-0037	Wireway Gutter 10'	A/R
14	750-0049	CLR-12-2, CABLE LADDER RACK, 12 in X10 ft, 2 in TUBULAR, GRAY, MTP	A/R
15	915-053	GBI14412TBI-KIT, GROUND BAR, .25x4x12, TB PATTERN, #2 HALO, INSTALL KIT, 3/8 SS, 1PVC	1

THIS DRAWING CONTAINS PROPRIETARY INFORMATION OF THERMOBOND BUILDINGS, LLC. IT IS INTENDED SOLELY FOR THE INFORMATION AND USE OF PARTIES OPERATING AND MAINTAINING THE EQUIPMENT DESCRIBED HEREIN AND MAY NOT BE USED, REPRODUCED OR DISCLOSED TO ANY OTHER PARTIES FOR ANY OTHER PURPOSE WITHOUT THE EXPRESSED WRITTEN PERMISSION OF THERMOBOND BUILDINGS, LLC.

THERMOBOND BUILDINGS

209 N. Court P.O. Box 445, Elk Point, SD. 57025-0445
Phone: 605-356-2090, www.thermobond.com

Scale: *NONE*
Date: *4/8/15*
Drawn By: *NRS*
PROJECT NUMBER: *1401-39*

Title: *BILL OF MATERIALS FOR 11'-6"W. OD X 20'L. OD X 9'H. ID BLDG.*

PROJECT NAME: *METRO AREA PLANNING COUNCIL*

Drawing Number: *AGB9370*

NOTES:
1. ALL CONDUIT SHOWN IS APPROXIMATE AND MAY NOT REFLECT ACTUAL RUNS IN BUILDING

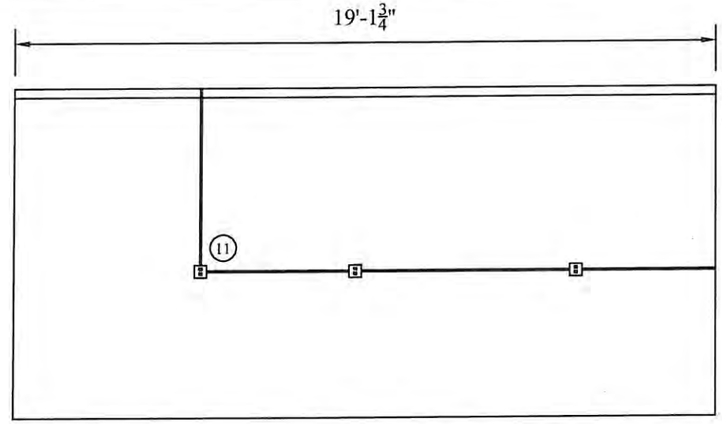

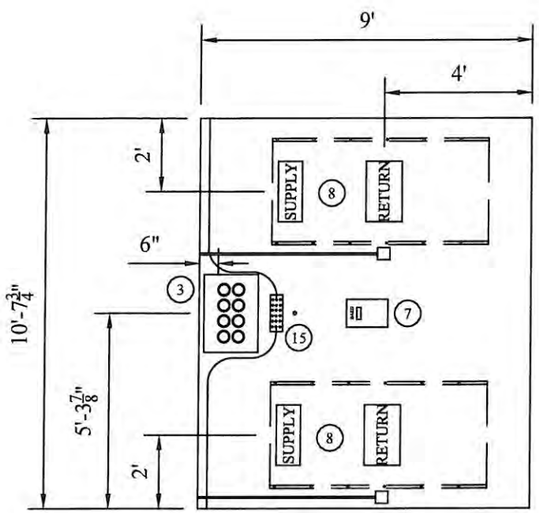

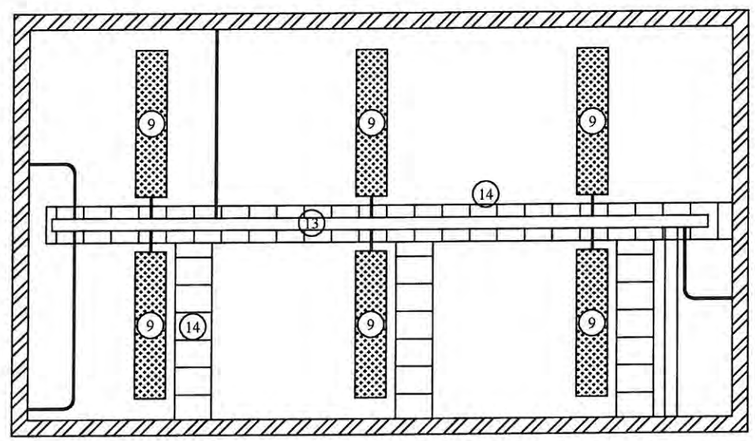

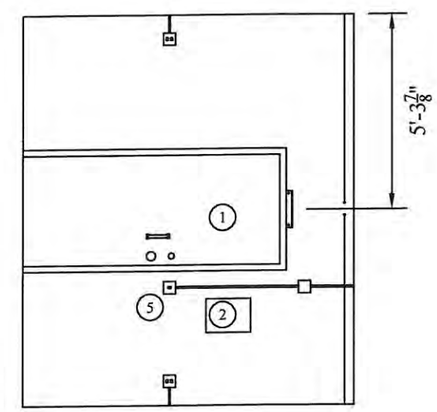

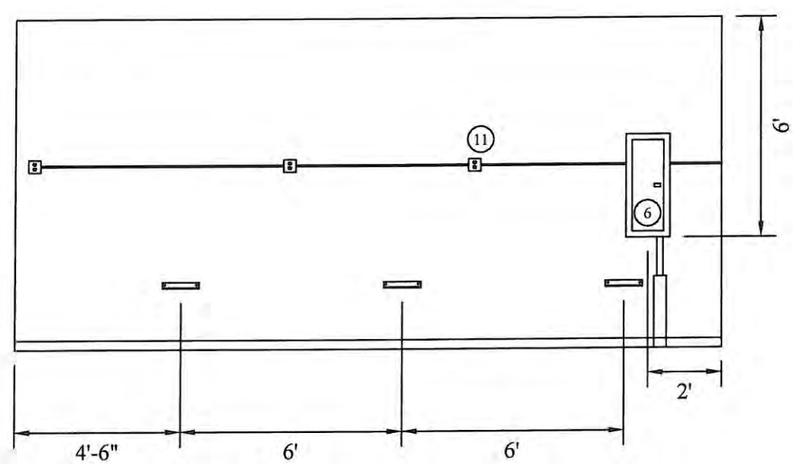

COMMONWEALTH OF MASSACHUSETTS
MICHAEL T. DE BOER
No. 40948
REGISTERED PROFESSIONAL ENGINEER
4-10-15

THIS DRAWING CONTAINS PROPRIETARY INFORMATION OF THERMOBOND BUILDINGS, LLC. IT IS INTENDED SOLELY FOR THE INFORMATION AND USE OF PARTIES OPERATING AND MAINTAINING THE EQUIPMENT DESCRIBED HEREIN AND MAY NOT BE USED, REPRODUCED OR DISCLOSED TO ANY OTHER PARTIES FOR ANY OTHER PURPOSE WITHOUT THE EXPRESSED WRITTEN PERMISSION OF THERMOBOND BUILDINGS, LLC.

THERMOBOND BUILDINGS
209 N. Court P.O. Box 445, Elk Point, SD. 57025-0445
Phone: 605-356-2090, www.thermobond.com

Scale: 1/4" = 1'	Title: INTERIOR LAYOUT FOR 11'-6"W. OD X 20'L. OD X 9'H. ID BLDG.	
Date: 4/8/15		
Drawn By: NRS		
PROJECT NUMBER: 1401-39	PROJECT NAME: METRO AREA PLANNING COUNCIL	Drawing Number: AGB9370
		PAGE 4 OF 9

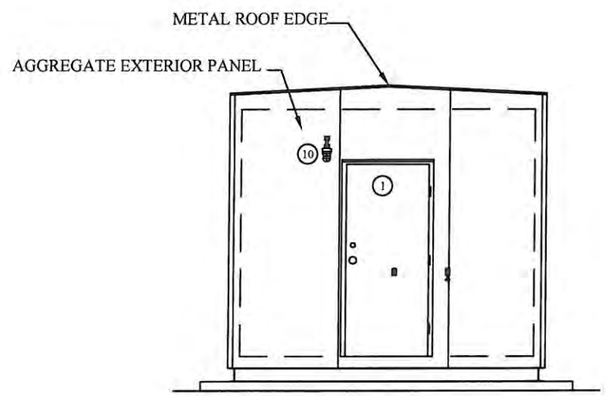

FRONT ELEVATION

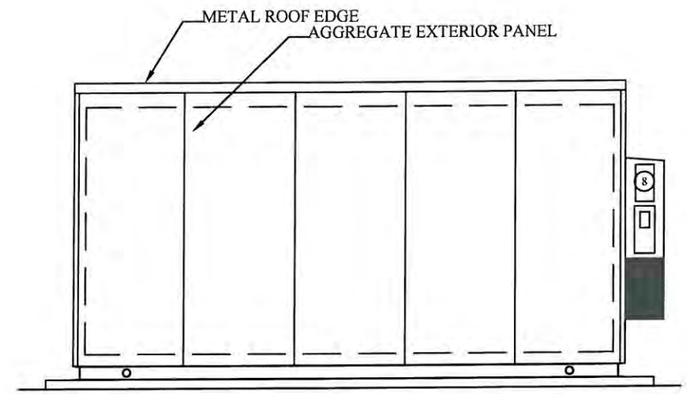

RIGHT ELEVATION

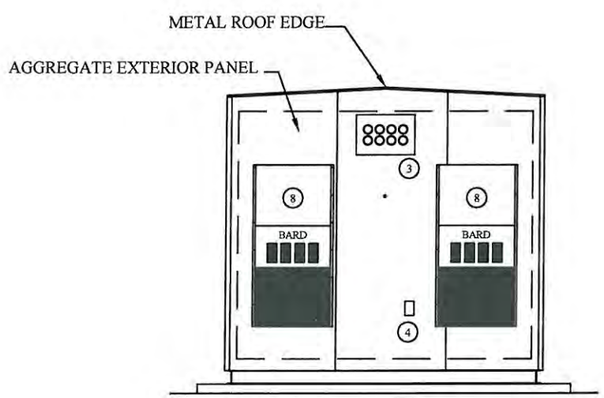

REAR ELEVATION

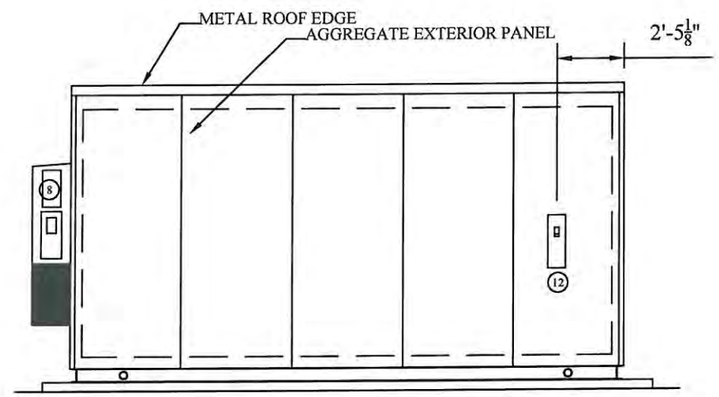

LEFT ELEVATION

COMMONWEALTH OF MASSACHUSETTS
MICHAEL T. DEBOER
No. 40048
REGISTERED PROFESSIONAL ENGINEER
4-10-15

THIS DRAWING CONTAINS PROPRIETARY INFORMATION OF THERMOBOND BUILDINGS, LLC. IT IS INTENDED SOLELY FOR THE INFORMATION AND USE OF PARTIES OPERATING AND MAINTAINING THE EQUIPMENT DESCRIBED HEREIN AND MAY NOT BE USED, REPRODUCED OR DISCLOSED TO ANY OTHER PARTIES FOR ANY OTHER PURPOSE WITHOUT THE EXPRESSED WRITTEN PERMISSION OF THERMOBOND BUILDINGS, LLC.

THERMOBOND BUILDINGS
209 N. Court P.O. Box 445, Elk Point, SD. 57025-0445
Phone: 605-356-2090, www.thermobond.com

Scale: 1/4" = 1'	Title: EXTERIOR LAYOUT FOR 11'-6"W. OD X 20'L. OD X 9'H. ID BLDG.
Date: 4/8/15	
Drawn By: NRS	
PROJECT NUMBER: 1401-39	PROJECT NAME: METRO AREA PLANNING COUNCIL
	Drawing Number: AGB9370

PANEL CIRCUIT AND LOAD SCHEDULE

	LOAD DESCRIPTION	QTY.	UNIT V.A.	LOAD PER PHASE (VA) PHASE A	PHASE B	TRIP	POLES	WIRE SIZE	A.I.C.
1	EXTERIOR LIGHT	1	100	100		20	1	12	10k
3	LIGHTS	6	58.8		352.8	20	1	12	10k
5	DUPLEXES	4	180	720		20	1	12	10k
7	DUPLEXES	4	180		720	20	1	12	10k
9	GFI	1	180	180		20	1	12	10k
11									
13									
15									
17									
19									
21									
23									
25									
27									
29									
31									
33									
35									
37									
39									
	SUBTOTAL			1000	1073				

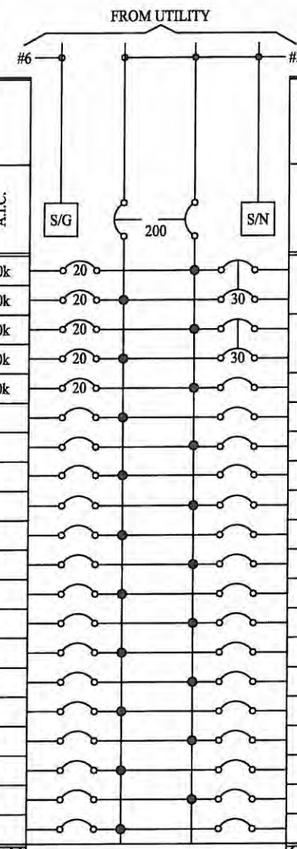

SERVICE: _____

DESIGNATION: _____

LOCATION: _____

A.I.C.	WIRE SIZE	POLES	TRIP	LOAD PER PHASE (VA) PHASE B	PHASE A	UNIT V.A.	QTY.	LOAD DESCRIPTION	
10k	10	2	30		2616	5232	1	2 TON BARD HVAC	2
				2616					4
10k	10	2	30		2616	5232	1	2 TON BARD HVAC	6
				2616					8
									10
									12
									14
									16
									18
									20
									22
									24
									26
									28
									30
									32
									34
									36
									38
									40
				5232	5232	SUBTOTAL CONTINUOUS			

TOTAL KVA PHASE A	6.232
TOTAL KVA PHASE B	6.305
TOTAL AMPS PHASE A	51.9
TOTAL AMPS PHASE B	52.5

VOLTAGE: 120/240V. | CYCLE: 60 | PHASE: 1 | WIRES: 3

NEUTRAL:

MAIN BREAKER: 200 AMP FRAME | A/C: 22 KA | TRIP: 200 AMP

MAIN LUGS: | MAIN COPPER BUS: 200 AMP

MAINS: TOP ☒ BOTTOM ☐

MANUFACTURER: SQUARE D

CATALOG NUMBERS: QO140M200

NO EQUAL: ☐ APPROVED EQUAL: ☒

MOUNTING: SURFACE ☒ FLUSH ☐

THIS DRAWING CONTAINS PROPRIETARY INFORMATION OF THERMOBOND BUILDINGS, LLC. IT IS INTENDED SOLELY FOR THE INFORMATION AND USE OF PARTIES OPERATING AND MAINTAINING THE EQUIPMENT DESCRIBED HEREIN AND MAY NOT BE USED, REPRODUCED OR DISCLOSED TO ANY OTHER PARTIES FOR ANY OTHER PURPOSE WITHOUT THE EXPRESSED WRITTEN PERMISSION OF THERMOBOND BUILDINGS, LLC.

THERMOBOND BUILDINGS

209 N. Court P.O. Box 445, Elk Point, SD. 57025-0445
Phone: 605-356-2090, www.thermobond.com

Scale: *NONE*

Date: *4/8/15*

Drawn By: *NRS*

Title: *LOAD CENTER*

PROJECT NUMBER: *1401-39*

PROJECT NAME: *METRO AREA PLANNING COUNCIL*

Drawing Number: *AGB9370*

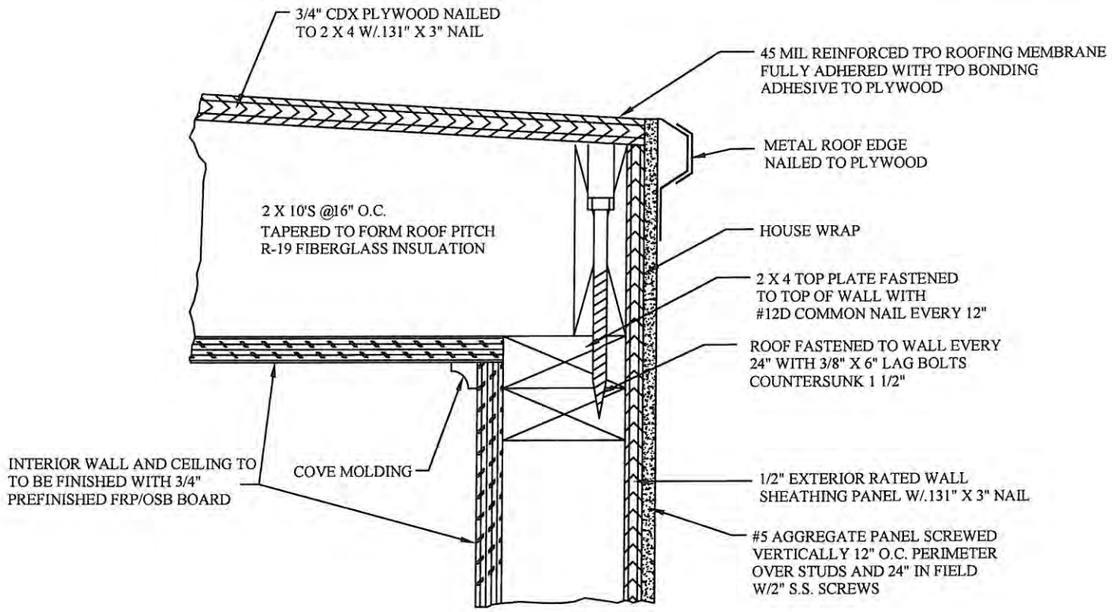

WALL TO ROOF DETAIL

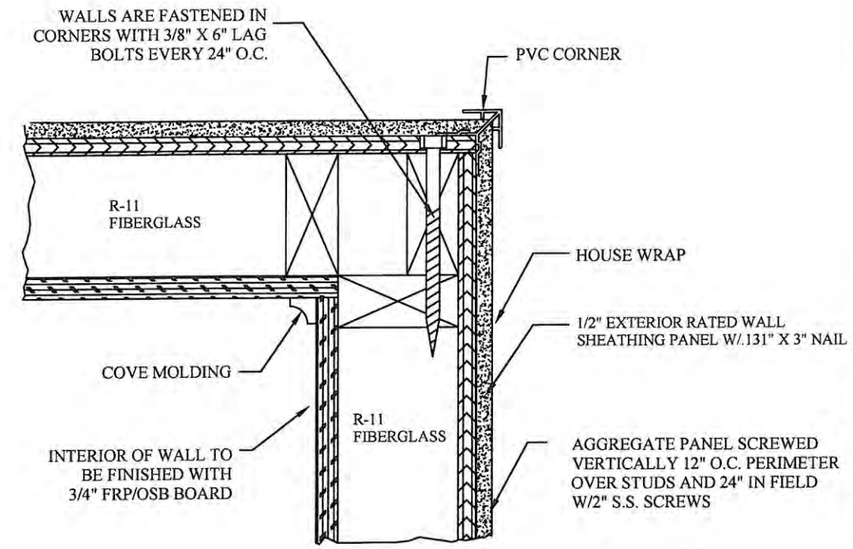

WALL CORNER DETAIL

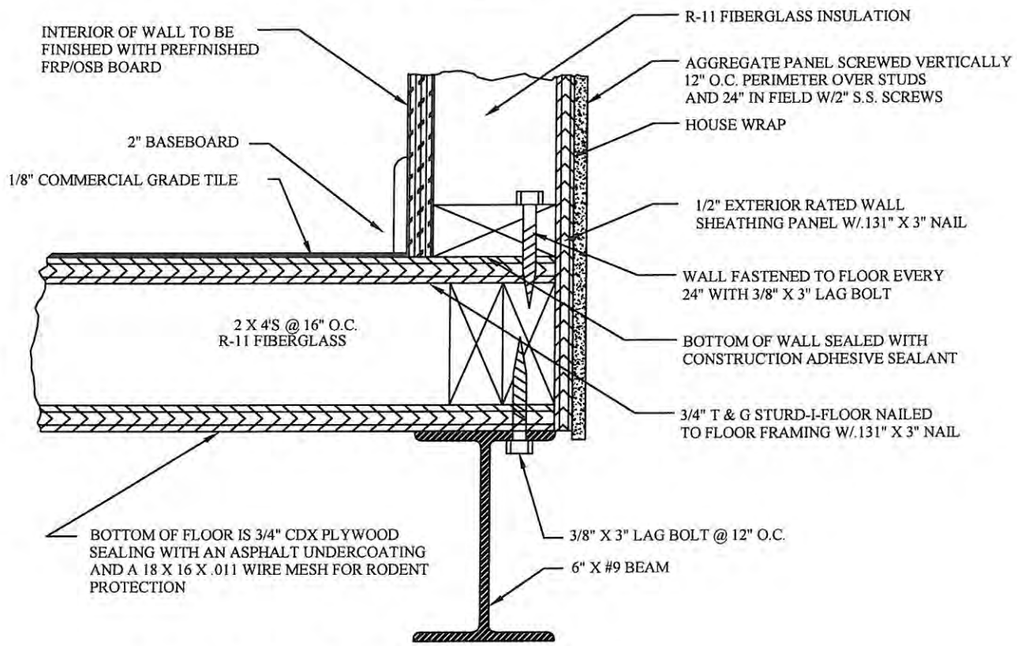

WALL TO FLOOR DETAIL

NOTES:

1. ALL PLYWOOD SHALL BE NAILED EVERY 6" AROUND PERIMETER AND EVERY 12" IN FIELD.
2. HOUSE WRAP TO BE INSTALLED 1/8" BELOW SHEETING AND EXTEND TO TOP OF TOP PLATE. ALL SEAMS TO BE LAPPED 6" AND TAPED W/SEAM TAPE.
3. ALL SCREW HOLES THROUGH PANELS FILLED WITH POLYURETHANE CAULK PRIOR TO SCREW BEING INSTALLED.
4. ALL STRUCTURAL LUMBER SHALL BE SPF #1 OR #2.
5. ALL CDX, EXTERIOR SHEATHING & T&G GLUED TO STUDS WITH ENERBOND SF GLUE TO ALL STUDS BEFORE NAILING.

THIS DRAWING CONTAINS PROPRIETARY INFORMATION OF THERMOBOND BUILDINGS, LLC. IT IS INTENDED SOLELY FOR THE INFORMATION AND USE OF PARTIES OPERATING AND MAINTAINING THE EQUIPMENT DESCRIBED HEREIN AND MAY NOT BE USED, REPRODUCED OR DISCLOSED TO ANY OTHER PARTIES FOR ANY OTHER PURPOSE WITHOUT THE EXPRESSED WRITTEN PERMISSION OF THERMOBOND BUILDINGS, LLC.

THERMOBOND BUILDINGS
209 N. Court P.O. Box 445, Elk Point, SD. 57025-0445
Phone: 605-356-2090, www.thermobond.com

Scale: NONE	Title: BUILDING CONSTRUCTION DETAILS		
Date: 4/8/15			
Drawn By: NRS			
PROJECT NUMBER: 1401-39	PROJECT NAME: METRO AREA PLANNING COUNCIL	Drawing Number: AGB9370	

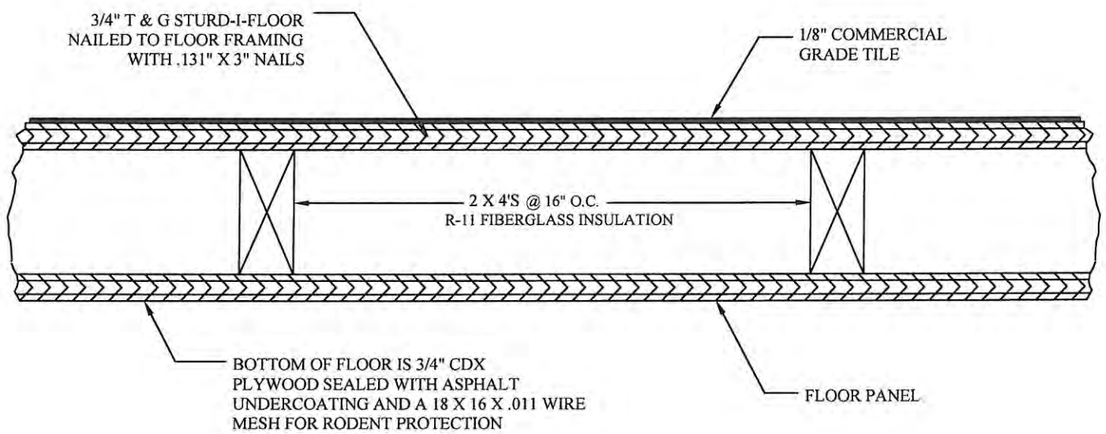

FLOOR DETAIL

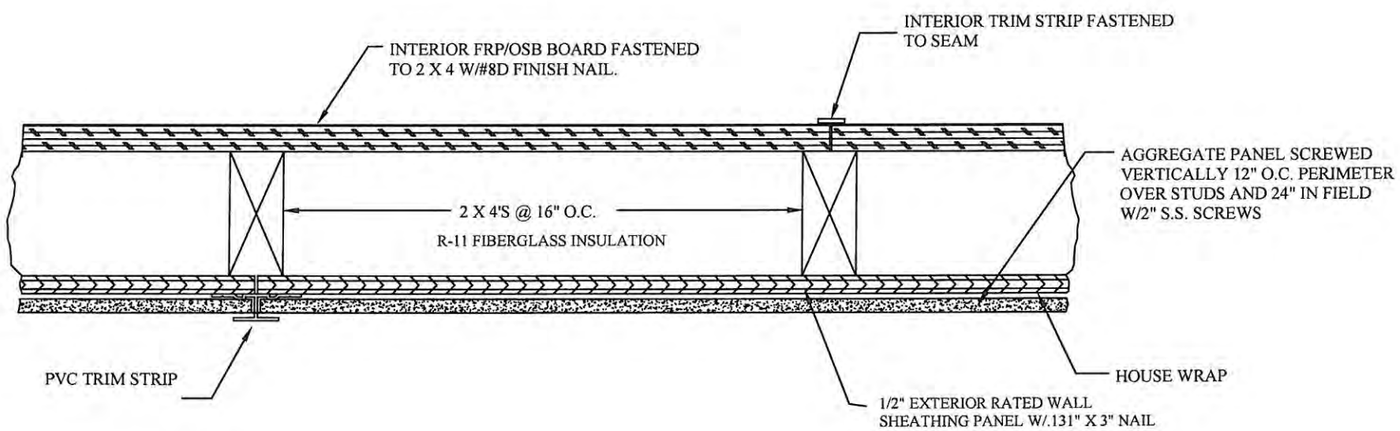

WALL DETAIL

NOTES:

1. ALL PLYWOOD SHALL BE NAILED EVERY 6" AROUND PERIMETER AND EVERY 12" IN FIELD.
2. HOUSE WRAP TO BE INSTALLED 1/8" BELOW SHEETING AND EXTEND TO TOP OF TOP PLATE. ALL SEAMS TO BE LAPPED 6" AND TAPED W/SEAM TAPE.
3. ALL SCREW HOLES THROUGH PANELS FILLED WITH POLYURETHANE CAULK PRIOR TO SCREW BEING INSTALLED.
4. ALL STRUCTURAL LUMBER SHALL BE SPF #1 OR #2.
5. ALL CDX, EXTERIOR SHEATHING & T&G GLUED TO STUDS WITH ENERBOND SF GLUE TO ALL STUDS BEFORE NAILING.

THIS DRAWING CONTAINS PROPRIETARY INFORMATION OF THERMOBOND BUILDINGS, LLC. IT IS INTENDED SOLELY FOR THE INFORMATION AND USE OF PARTIES OPERATING AND MAINTAINING THE EQUIPMENT DESCRIBED HEREIN AND MAY NOT BE USED, REPRODUCED OR DISCLOSED TO ANY OTHER PARTIES FOR ANY OTHER PURPOSE WITHOUT THE EXPRESSED WRITTEN PERMISSION OF THERMOBOND BUILDINGS, LLC.

THERMOBOND BUILDINGS
209 N. Court P.O. Box 445, Elk Point, SD. 57025-0445
Phone: 605-356-2090, www.thermobond.com

Scale: NONE	Title: BUILDING CONSTRUCTION DETAILS	
Date: 4/8/15		
Drawn By: NRS		
PROJECT NUMBER: 1401-39	PROJECT NAME: METRO AREA PLANNING COUNCIL	Drawing Number: AGB9370
		PAGE 8 OF 9

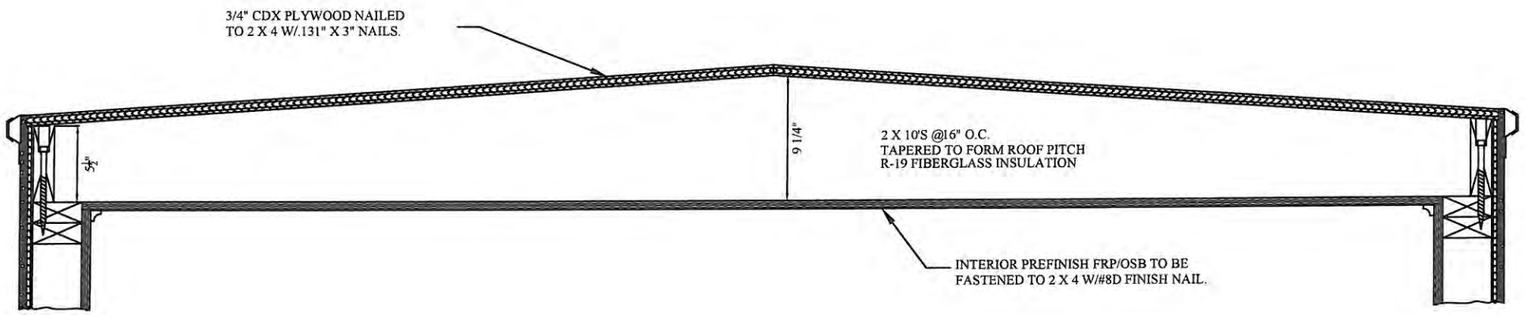

ROOF STRUCTURE END DETAIL

COMMONWEALTH OF MASSACHUSETTS
MICHAEL T. DEBOER
No. 40948
REGISTERED PROFESSIONAL ENGINEER
4-10-15

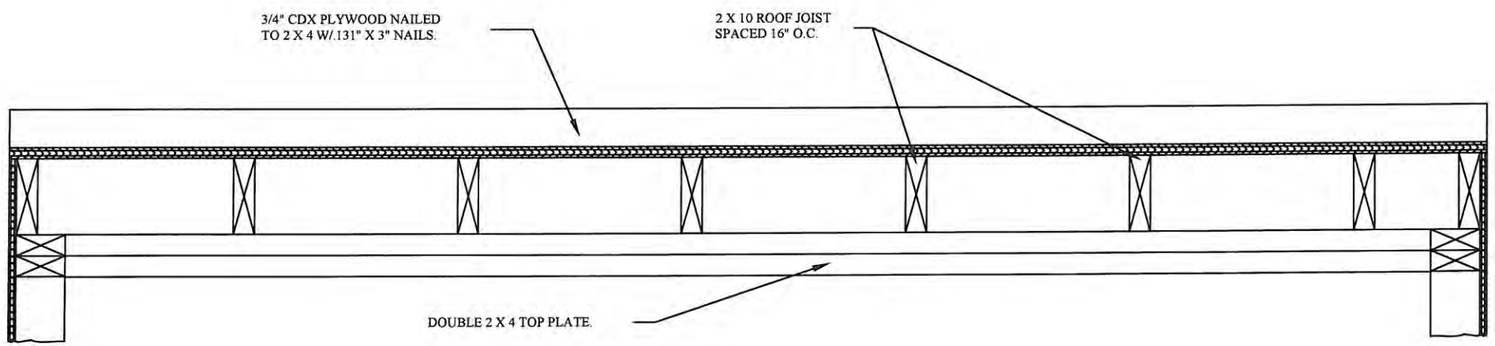

ROOF STRUCTURE SIDE DETAIL

NOTES:
1. ALL PLYWOOD SHALL BE NAILED EVERY 6" AROUND PERIMETER AND EVERY 12" IN FIELD.
2. HOUSE WRAP TO BE INSTALLED 1/8" BELOW SHEETING AND EXTEND TO TOP OF TOP PLATE. ALL SEAMS TO BE LAPPED 6" AND TAPED W/SEAM TAPE.
3. ALL SCREW HOLES THROUGH PANELS FILLED WITH POLYURETHANE CAULK PRIOR TO SCREW BEING INSTALLED.
4. ALL STRUCTURAL LUMBER SHALL BE SPF #1 OR #2.
5. ALL CDX, EXTERIOR SHEATHING & T&G GLUED TO STUDS WITH ENERBOND SF GLUE TO ALL STUDS BEFORE NAILING.

THIS DRAWING CONTAINS PROPRIETARY INFORMATION OF THERMOBOND BUILDINGS, LLC. IT IS INTENDED SOLELY FOR THE INFORMATION AND USE OF PARTIES OPERATING AND MAINTAINING THE EQUIPMENT DESCRIBED HEREIN AND MAY NOT BE USED, REPRODUCED OR DISCLOSED TO ANY OTHER PARTIES FOR ANY OTHER PURPOSE WITHOUT THE EXPRESSED WRITTEN PERMISSION OF THERMOBOND BUILDINGS, LLC.

THERMOBOND BUILDINGS
209 N. Court P.O. Box 445, Elk Point, SD. 57025-0445
Phone: 605-356-2090, www.thermobond.com

Scale: NONE	Title: BUILDING CONSTRUCTION DETAILS	
Date: 4/8/15		
Drawn By: NRS		
PROJECT NUMBER: 1401-39	PROJECT NAME: METRO AREA PLANNING COUNCIL	Drawing Number: AGB9370
		PAGE 9 OF 9

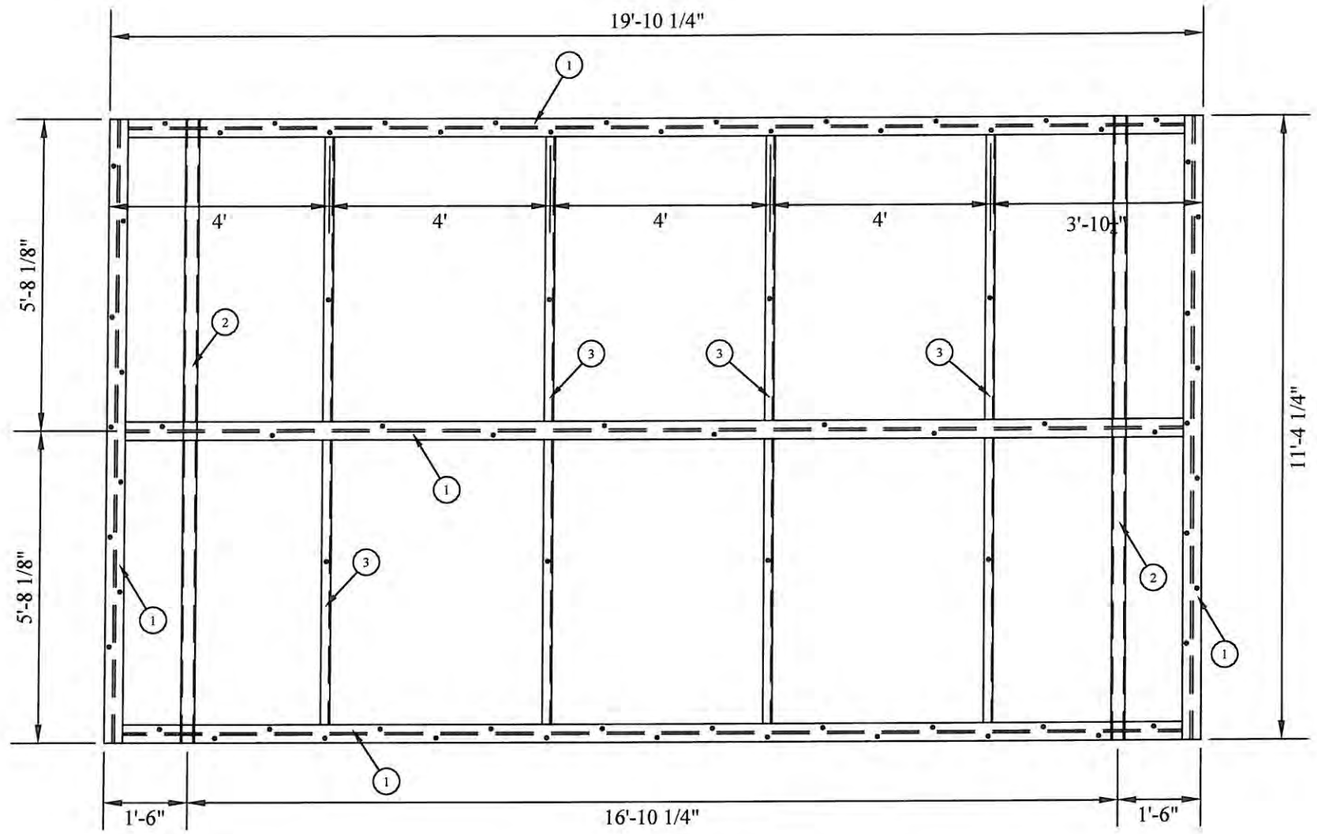

3/8" = 1' SCALE
TOP VIEW

WELDED ASSEMBLY

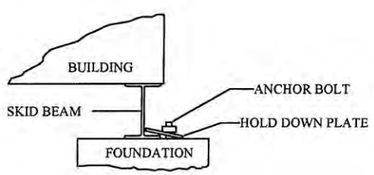

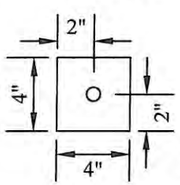

PLATE TO BE 1/4" THICK GRADE A36 WITH 7/8" DIA CUTOUT

1 1/2" = 1' SCALE
ANCHOR PLATE DETAIL

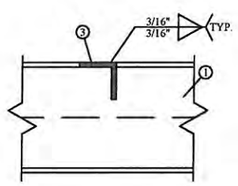

1 1/2" = 1' SCALE
SECTION "A-A"

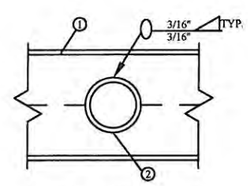

1 1/2" = 1' SCALE
SECTION "B-B"

NOTES:
1. FINISH: PAINTED W/ BROWN RUST PREVENTATIVE PAINT.

UNLESS OTHERWISE SPECIFIED ALL DIMENSIONS SHOWN ON THIS DRAWING SHALL HAVE THE FOLLOWING TOLERANCE:
FRACTION ± 1/8"
ANGLE ± 2°

THIS DRAWING CONTAINS PROPRIETARY INFORMATION OF THERMOBOND BUILDINGS, LLC. IT IS INTENDED SOLELY FOR THE INFORMATION AND USE OF PARTIES OPERATING AND MAINTAINING THE EQUIPMENT DESCRIBED HEREIN AND MAY NOT BE USED, REPRODUCED OR DISCLOSED TO ANY OTHER PARTIES FOR ANY OTHER PURPOSE WITHOUT THE EXPRESSED WRITTEN PERMISSION OF THERMOBOND BUILDINGS, LLC.

NO.	QTY.	GRADE	DESCRIPTION	WEIGHT
			TOTAL BLACK STEEL WEIGHT	1026.0#
3.	8	A36	ANGLE, SUPPORT (2 X 2 X 1/4)	132.1#
2.	2	A500B	PIPE SUPPORT (3" NOM. SCH 40)	172.1#
1.	5	A992	BEAM SUPPORT (W6 X 9#) GRADE 50	721.8#

LIST OF MATERIAL

THERMOBOND BUILDINGS
209 N. Court P.O. Box 445, Elk Point, SD. 57025-0445
Phone: 605-356-2090, www.thermobond.com

Scale: NONE	Title: BOX SKID ASSEMBLY FOR 11'-6"W. OD X 20'L. OD X 9'H. ID BUILDING
Date: 4/8/15	
Drawn By: NRS	
PROJECT NUMBER: 1401-39	PROJECT NAME: METRO AREA PLANNING COUNCIL
Drawing Number: 15B1220	PAGE 1 OF 1

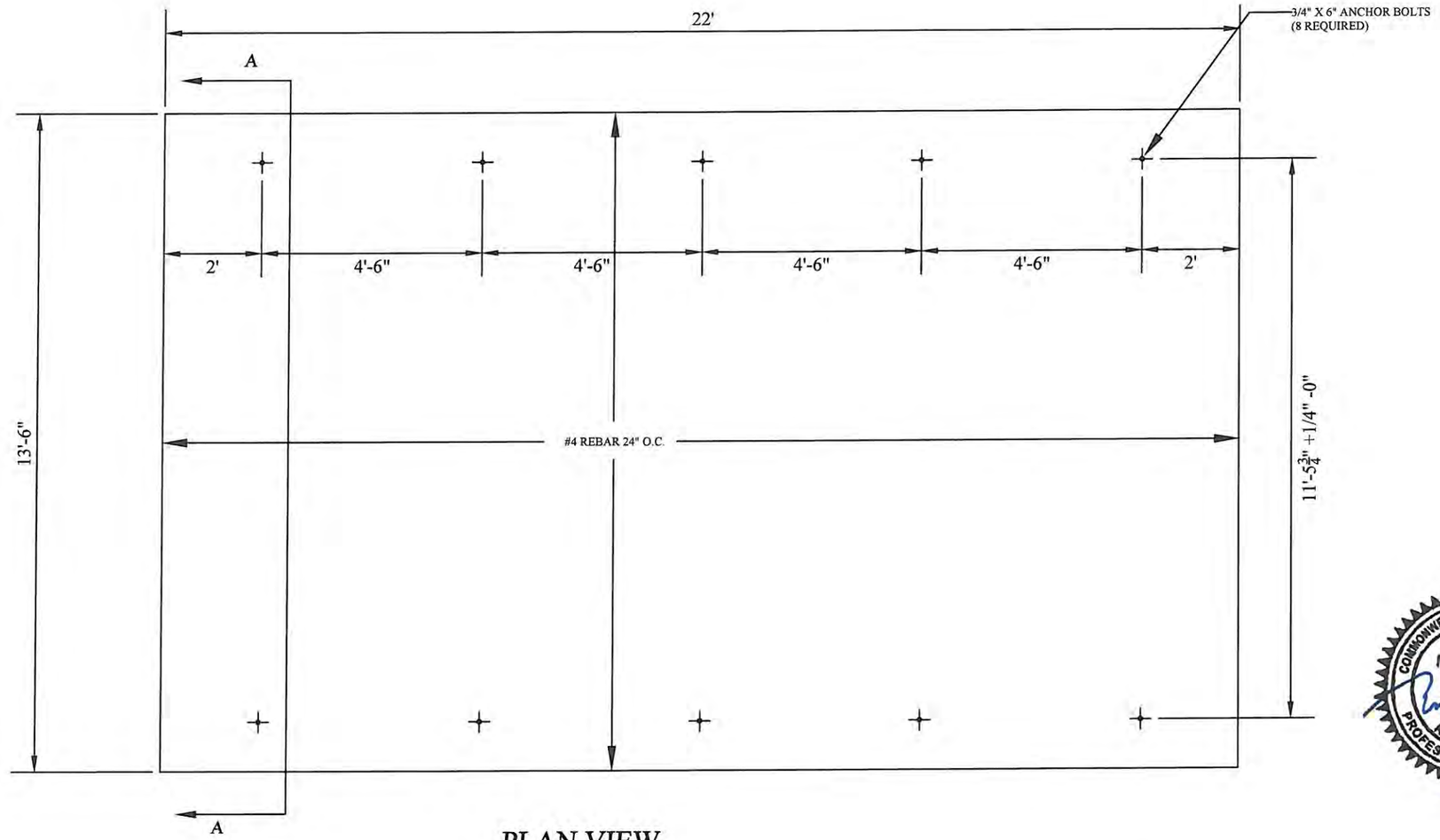

PLAN VIEW

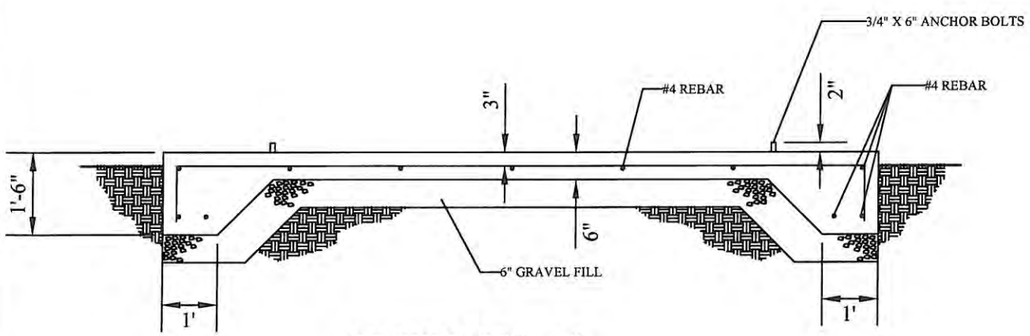

SECTION "A-A"

NOTES:
1. CONCRETE SHALL ATTAIN A MINIMUM ULTIMATE COMPRESSION STRENGTH OF 4000 PSI WITHIN 28 DAYS.
2. ALL REBAR TO HAVE A MINIMUM OF 2" CONCRETE COVER.

THIS DRAWING CONTAINS PROPRIETARY INFORMATION OF THERMOBOND BUILDINGS, LLC. IT IS INTENDED SOLELY FOR THE INFORMATION AND USE OF PARTIES OPERATING AND MAINTAINING THE EQUIPMENT DESCRIBED HEREIN AND MAY NOT BE USED, REPRODUCED OR DISCLOSED TO ANY OTHER PARTIES FOR ANY OTHER PURPOSE WITHOUT THE EXPRESSED WRITTEN PERMISSION OF THERMOBOND BUILDINGS, LLC.

THERMOBOND BUILDINGS
209 N. Court P.O. Box 445, Elk Point, SD. 57025-0445
Phone: 605-356-2090, www.thermobond.com

Scale: NONE	Title: SLAB FOUNDATION FOR 11'-6"W. OD X 20'L. OD X 9'H. ID BUILDING	
Date: 4/8/15		
Drawn By: NRS		
PROJECT NUMBER: 1401-39	PROJECT NAME: METRO AREA PLANNING COUNCIL	Drawing Number: S15B1220 PAGE 1 OF 1