PLYMOUTH T WHARF

PLYMOUTH, MA

WHARF REPLACEMENT PROJECT-PHASE I

DECEMBER 2015

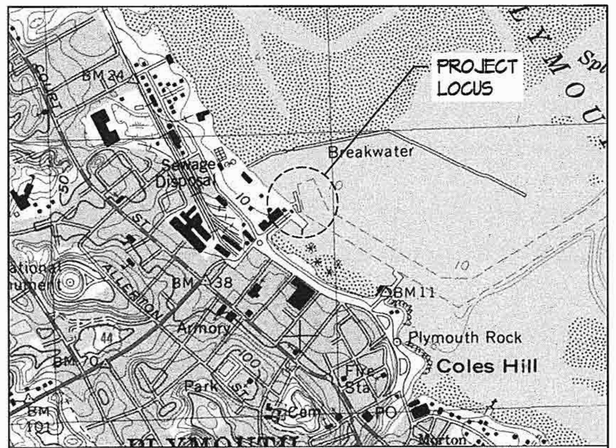

LOCUS PLAN

Project Owner:

Town of Plymouth

Department of Marine and Environmental Affairs

11 Lincoln St.

Plymouth, MA 02360

Design Team:

Bourne Consulting Engineering, PC- **Waterfront Engineers**

Franklin, MA

RDK Engineers - **Electrical Engineering**

Andover, MA

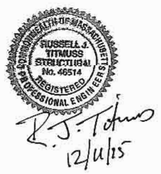

Bourne Consulting Engineering, PC

Waterfront Engineers

File: X:\34946-\34032 PLYMOUTH T WHARF PHASE 1\FINAL DESIGN\BID #2\Sht-01 COVER SHEET.DWG

CODES:

AMERICAN SOCIETY FOR TESTING AND MATERIALS (ASTM)
AMERICAN WELDING SOCIETY (AWS)
AMERICAN INSTITUTE OF STEEL CONSTRUCTION (AISC)
AMERICAN INSTITUTE OF TIMBER CONSTRUCTION (AITC)
AMERICAN CONCRETE INSTITUTE (ACI)
CONCRETE REINFORCING STEEL INSTITUTE (CRSI)
MASSACHUSETTS STATE BUILDING CODE
THE COMMONWEALTH OF MASSACHUSETTS, DEPARTMENT OF PUBLIC WORKS "STANDARD SPECIFICATIONS FOR HIGHWAYS AND BRIDGES" (1988 EDITION, 15 JUNE 2012 SUPPLEMENTAL SPECIFICATIONS) (MHD), & 14 JUNE 2013 INTERIM SUPPLEMENTAL SPECIFICATIONS (MHD)

DESIGN CRITERIA – LIVE LOADS

PIER	DISTRIBUTED LIVE LOAD 175 PSF
	HS–20 TRUCK (16 TON AXLE)
BOARDWALK	LIVE LOAD 100 PSF
CRANE FOUNDATION	BASED ON MAX 4,000LB PICK AT 20' MAX RADIUS
	MAX OVERTURNING MOMENT 200,000 FT–LBS
VESSEL BERTHING	UP TO 60 FOOT
DESIGN WAVE HEIGHT	5.4 FEET

OSHA REQUIREMENTS:

PURSUANT TO M.G.L. c.30, §39S, ANY PERSON SIGNING A CONTRACT TO WORK ON A PUBLIC BUILDING OR PUBLIC WORKS PROJECT ESTIMATED TO COST MORE THAN $10,000, MUST CERTIFY UNDER THE PAINS AND PENALTIES OF PERJURY THAT ALL EMPLOYEES EMPLOYED ON THE WORKSITE, OR IN WORK SUBJECT TO THE BID, HAVE SUCCESSFULLY COMPLETED AT LEAST TEN HOURS OF OSHA APPROVED TRAINING. PROOF OF OSHA CERTIFICATION OF ALL WORKERS ONSITE WILL BE REQUIRED BY THE CITY PRIOR TO THE START OF WORK.

SURVEY CONTROL AND BASELINES:

1. TOPOGRAPHIC DATA LOCAL TO T–WHARF SHOWN HEREON WAS COLLECTED ON JANUARY 19, 2006 BY BOURNE CONSULTING ENGINEERING AND ONLY REFLECTS CONDITIONS AS THEY EXISTED DURING THE TIME OF THE SURVEY. ADDITIONAL TOPOGRAPHIC DATA PROVIDED BY TOWN OF PLYMOUTH.
2. COORDINATES ARE BASED ON MASSACHUSETTS (MAINLAND) STATE PLANE COORDINATE SYSTEM (NAD 83) AND ARE EXPRESSED IN FEET.
3. ELEVATIONS ARE SHOWN IN FEET AND TENTHS BASED ON MEAN LOW WATER (MLW) DATUM.
4. BENCHMARK "BM11" IS A 3 FOOT METAL ROD SET IN THE NORTHEAST PARKING ISLAND OF THE STATE BOAT RAMP PARKING LOT. IT IS SET AT EL. 8.93 NAVD88 AS PROVIDED BY THE TOWN OF PLYMOUTH, MA.
5. DATUM CONVERSION TO MLW IS BASED ON A CONVERSION OF +5.43 NAVD88 TO MLW AS PUBLISHED IN THE NOAA BENCHMARK DATA SHEETS FOR PLYMOUTH.
6. HYDROGRAPHIC SURVEY CONDUCTED BY OCEAN SURVEYS, INC., (OSI). THE INFORMATION PRESENTED REPRESENTS THE RESULTS OF A SURVEY PERFORMED ON JUNE 11–19, 1998.
7. THE LOCATIONS OF EXISTING UNDERGROUND UTILITIES ARE SHOWN IN AN APPROXIMATE WAY ONLY, BASED ON UTILITY COMPANY RECORDS AND LOCATION OF OBSERVABLE FEATURES. BCE MAKES NO WARRANTY OR GUARANTEE TO THE ACCURACY OF THE LOCATION OF UNDERGROUND UTILITIES.
8. SEE SHEET 4 FOR BORING INFORMATION. BCE MAKES NO WARRANTY OR GUARANTEE TO THE ACCURACY OF THE INFORMATION SHOWN.
9. EXISTING SURVEY CONTROL POINTS ARE PROVIDED AND SHOWN ON SHEET 3. THE CONTRACTOR SHALL INSTALL ADDITIONAL SURVEY CONTROL AS NECESSARY TO PERFORM THE WORK. PERMANENT SURVEY CONTROL (AT LEAST 2 POINTS) SHALL BE ESTABLISHED FOR THE PROJECT AND PROTECTED FROM DAMAGE DURING CONSTRUCTION AND PROVIDED ON AS–BUILT DRAWINGS.
10. THE CONTRACTOR SHALL ESTABLISH AND MAINTAIN PROJECT BASELINES AND CONTROL AS REQUIRED TO ENSURE ACCURATE LOCATION OF ALL ELEMENTS OF THE PROJECT.

SITE ACCESS AND STAGING AREAS:

1. CONTRACTOR STAGING AREA SHALL BE LOCATED WITHIN THE PROJECT LIMITS AS SHOWN ON SHEET 5.
2. CONTRACTOR TO MAINTAIN ACCESS TO TOWN PIER AT ALL TIMES. AREA SHALL BE KEPT CLEAR AT ALL TIMES UNLESS OTHERWISE SPECIFIED AND APPROVED BY THE ENGINEER.
3. NO MATERIALS OR EQUIPMENT SHALL BE STORED OUTSIDE LIMITS SHOWN UNLESS APPROVED BY ENGINEER.
4. THE CONTRACTOR SHALL BE SOLELY RESPONSIBLE FOR SITE SECURITY. CONTRACTOR SHALL PROVIDE CHAIN LINK FENCING AROUND PERIMETER OF WORK AREA AND STAGING AREA TO PREVENT PUBLIC ACCESS AND PROVIDE PUBLIC SAFETY. THE FENCE SHALL BE A MINIMUM OF 6'HIGH AND CONSTRUCTED OF GALVANIZED STEEL CHAIN LINK WITH POSTS AT 8' ON CENTER. FENCE SHALL BE SUPPORTED BY CONCRETE BLOCKS TO RECEIVE POSTS.
5. CONTRACTOR SHALL BE RESPONSIBLE FOR JOB SAFETY. ALL CONSTRUCTION ACTIVITY SHALL BE IN ACCORDANCE WITH OSHA STANDARDS AND LOCAL AND STATE REGULATIONS.
6. AREAS OUTSIDE THE LIMITS OF THE WORK DISTURBED OR DAMAGED BY THE CONTRACTOR SHALL BE RETURNED TO THEIR ORIGINAL CONDITION AT NO EXPENSE TO THE OWNER.
7. ALL EXISTING PAVEMENT DAMAGED WITHIN THE PROJECT LIMITS SHALL BE REPAIRED AT NO ADDITIONAL COST TO THE OWNER.
8. THE CONTRACTOR SHALL STAGE AND SEQUENCE CONSTRUCTION TO ENSURE STABILITY OF EXISTING STRUCTURES.

SITE PREPARATION:

1. CONTRACTOR SHALL INSTALL ALL SIGNAGE PRIOR TO INITIATION OF CONSTRUCTION ACTIVITIES INCLUDING OWNER PROJECT SIGNAGE, DEP FILE NUMBER AND FEDERAL AND STATE MANDATED WORK PLACE SIGNAGE.
2. CONTRACTOR SHALL HAVE IN–PLACE TRASH AND SANITARY FACILITIES FOR THE WORK PLACE.
3. EXISTING PAVEMENT, STRUCTURES AND AMENITIES WITHIN THE PROXIMITY OF THE WORK SHALL BE PROTECTED TO PREVENT ACCIDENTAL DAMAGE BY CONSTRUCTION ACTIVITIES.
4. DISCOVERY OF INCONSISTENT SITE INFORMATION OR CONDITIONS ARE TO BE IMMEDIATELY CONVEYED TO THE OWNER AND ENGINEER PRIOR TO COMMENCING OR CONTINUING CONSTRUCTION.
5. THE CONTRACTOR SHALL NOTIFY DIG–SAFE PRIOR TO COMMENCING ANY WORK ON SITE.
6. LOCATIONS OF EXISTING UNDERGROUND UTILITIES SHOWN ARE APPROXIMATE. THE CONTRACTOR SHALL VERIFY EXACT LOCATIONS OF UTILITIES AS MAY BE REQUIRED. THE CONTRACTOR SHALL BE FULLY RESPONSIBLE FOR ANY AND ALL DAMAGES OCCURRING AS A RESULT OF THE CONTRACTOR'S FAILURE TO LOCATE AND PROTECT UNDERGROUND UTILITIES. ALL REPAIRS SHALL BE MADE AT THE CONTRACTOR'S EXPENSE.
7. CONTRACTOR SHALL MAINTAIN AND PROTECT ALL EXISTING UTILITIES AND DRAINAGE AT ALL TIMES. THE CONTRACTOR SHALL REPAIR ANY DAMAGE AND RESTORE TO THE PRE–EXISTING CONDITION AT NO COST TO THE OWNER.
8. THE CONTRACTOR SHALL MAKE ALL ARRANGEMENTS AND BE RESPONSIBLE FOR PAYING ANY FEES OR COSTS FOR ANY POLE OR UTILITY ALTERATION OR RELOCATION.
9. CONTRACTOR SHALL SUPPLY AND INSTALL APPROVED FILTER FABRIC IN CATCH BASINS AND COVER AS REQUIRED TO PREVENT CONSTRUCTION RELATED FILL OR OTHER MATERIAL FALLING INTO CATCH BASIN.
10. CONTRACTOR SHALL CLEAN OUT ALL CATCH BASINS AND OTHER DRAINAGE STRUCTURES ON COMPLETION OF WORK.
11. CONTRACTOR SHALL SUPPLY ALL NECESSARY TEMPORARY UTILITIES FOR CONSTRUCTION INCLUDING WATER, POWER, LIGHTING, DATA AND TELEPHONE.
12. CONTRACTOR SHALL READ AND UNDERSTAND ALL REGULATORY CONDITIONS ASSOCIATED WITH THE PROJECT AND SHALL COMPLY WITH ALL ENVIRONMENTAL REQUIREMENTS AND PERMIT CONDITIONS.
13. CONTRACTOR SHALL CONFINE ALL OTHER TEMPORARY STOCKPILES OF EXCAVATED MATERIAL OR IMPORTED FILL USING HAY BALES AND FILTER FABRIC IN CONFORMANCE WITH PERMIT CONDITIONS.
14. CONTRACTOR SHALL PROVIDE A CONFINED CONCRETE TRUCK WASHDOWN AREA AT A LOCATION TO BE APPROVED BY THE ENGINEER. WASHDOWN AREA SHALL INCLUDE PROTECTION TO PAVEMENT, A PERIMETER WALL AND A FILTER FABRIC LINER. NO RUNOFF CONTAINING CEMENT OR OTHER SUSPENDED SOLIDS WILL BE PERMITTED. ALL MATERIALS SHALL BE COMPLETELY REMOVED ON COMPLETION OF CONSTRUCTION AND DISPOSED OF AT AN APPROVED DISPOSAL LOCATION.

EARTHWORK:

1. EARTHWORK MATERIALS TO MEET THE FOLLOWING STANDARDS:
   - GRANULAR BORROW/FILL MHD M1.01.0
   - GRAVEL BORROW TYPE B MHD M1.03.0
   - DENSE GRADED CRUSHED STONE FOR SUBBASE MHD M2.01.7
   - CRUSHED STONE MHD M2.01.0
   - UNDERLAYER STONE MHD M2.02.4
2. ORDINARY FILL BORROW SHALL BE EXISTING SUITABLE MATERIAL FOR REUSE WITH MAXIMUM 4" STONE.

CONCRETE:

1. ALL REINFORCEMENT SHALL BE NEW DEFORMED STEEL BARS, GRADE 60 CONFORMING TO ASTM A615, EPOXY–COATING CONFORMING TO ASTM A775/A775M.
2. REINFORCEMENT ACCESSORIES SHALL BE DIELECTRIC COATED STEEL OR APPROVED PLASTIC.
3. CONCRETE SHALL HAVE THE FOLLOWING SPECIFICATIONS:
   - MINIMUM COMPRESSIVE STRENGTH: 5,000 PSI AT 28 DAYS
   - AIR ENTRAINMENT SHALL BE MAINTAINED AT 4.5% – 7.5%
   - MAXIMUM SIZE OF AGGREGATE SHALL BE ¾ INCH.
   - WATER TO CEMENT RATIO SHALL BE 0.40 UNLESS OTHERWISE NOTED.
   - CEMENT SHALL MEET ASTM C150, TYPE II
     - MIN. CEMENT PER CY SHALL BE 660LBS
4. GROUT SHALL BE A HIGH STRENGTH, NON–SHRINK GROUT WITH SALTWATER RESISTANCE, SUCH AS FIVE STAR SPECIAL GROUT 120 OR EQUIVALENT.

HEAVY TIMBER:

1. UNLESS OTHERWISE SPECIFIED, ALL TIMBER TO BE USED SHALL BE NO. 2 SOUTHERN PINE AS GRADED BY SPIB AND WITH DESIGN VALUES PER NFPA NATIONAL DESIGN SPECIFICATION OR THE EQUIVALENT FOR DOUGLAS FIR AS GRADED BY WCLIB AND WWPA.
2. ALL TIMBER SHALL BE NEW AND SUPPLIED WITH NOMINAL DIMENSIONS UNLESS OTHERWISE NOTED. TIMBER SHALL BE FINISHED S4S UNLESS NOTED OTHERWISE.
3. ALL NEW TIMBER MEMBERS TO WHICH THE PUBLIC MAY BE EXPOSED SHALL BE TREATED WITH ALKALINE COPPER QUATERNARY (ACQ) IN ACCORDANCE WITH AWPA STANDARDS TO A RETENTION OF 0.6 LBS/CU.FT OR EQUAL APPROVED.
4. MISC. HARDWARE: GALVANIZED STEEL PLATES AND ALL BOLTS AND RELATED HARDWARE SHALL BE FASHIONED FROM STEEL AND GALVANIZED AFTER FABRICATION AND IN ACCORDANCE WITH REQUIREMENTS OF ASTM A123, AND/OR A153. ALL BOLTS FOR TIMBER CONNECTIONS SHALL CONFORM TO ASTM A307 OR EQUAL APPROVED.

TIMBER PILES:

1. UNLESS OTHERWISE SPECIFIED, ALL SOUTH PIER PILES SHALL BE TROPICAL GREENHEART IN CONFORMANCE WITH ASTM D25. BEARING PILE TIP CIRCUMFERENCE SHALL BE 30" OR GREATER.
2. ALL BOARDWALK PILES SHALL BE TREATED SOUTHERN PINE OR DOUGLAS FIR IN CONFORMANCE WITH ASTM D25.
3. PILES SHALL BE INSTALLED TO THE CRITERIA SHOWN IN THE CONTRACT DOCUMENTS AND DRAWINGS.

ALUMINUM:

1. ALUMINUM SHAPES SHALL MEET THE SPECIFICATIONS OF ALUMINUM ALLOY 6061–T6.
2. ALL NUTS, BOLTS AND WASHERS SHALL BE STAINLESS STEEL MEETING ASTM F593 TYPE 316 ALLOY. NUTS SHALL BE SELF LOCKING.

LIST OF DRAWINGS:

1 Cover Sheet
2 Drawing List, Legend, Abbreviations & General Notes
3 Existing Conditions Plan
4 Boring Logs
5 Site Preparation
6 Demolition Plan
7 Existing Sections
8 Site Layout / Pier Sections
9 Pile Plan & Details
10 Pile Cap Layout Plan & Details
11 Deck Concrete Details
12 Precast Concrete Deck Layout & Details
13 Fender System/Wave Fence Plan
14 Timber Details
15 Deck Fixture Layout Plan
16 Pier Utility Plan
17 Drainage Details-1
18 Drainage & Water Details-2
19 Boardwalk Plans & Sections
20 Boardwalk Details
21 Electrical- Legend, Notes, & Abbreviations
22 Electrical- Site Plan
23 Electrical- Details
24 Electrical- Details
25 Electrical - Demolition Site Plan
26 Pile Plan/Details - Historic Drawing
27 Stringer Plan/Details-Historic Drawing

LEGEND

CATCH BASIN
DRAIN MANHOLE
ELECTRIC MANHOLE
SEWER MANHOLE
TELEPHONE MANHOLE
HYDRANT
LIGHT POLE
UPJ UTILITY POLE
WV WATER VALVE
LADDER
BOLLARD
BUILDING
GP GATE POST
MP METAL POST
S SIGN POST
GG GAS GATE
GV GAS VALVE
12" DECIDUOUS TREE WITH TRUNK DIAMETER
12" CONIFEROUS TREE WITH TRUNK DIAMETER
R= RIM ELEVATION EQUALS
I= INVERT ELEVATION EQUALS
N.P.V. NO PIPES VISIBLE
T.O.D.= TOP OF DIRT ELEVATION EQUALS
T.O.W.= TOP OF WATER ELEVATION EQUALS
B.C.= BOTTOM OF CHANNEL ELEVATION EQUALS
WDF WOOD FENCE
L.S. LANDSCAPED AREA
BIT. BITUMINOUS
CONC. CONCRETE
SOIL BORING
14.53TW TOP OF WALL ELEVATION
X 14.81 SPOT GRADE ELEVATION
MLW MEAN LOW WATER
D UNDERGROUND DRAIN LINE
E UNDERGROUND ELECTRIC LINE
G UNDERGROUND GAS LINE
S UNDERGROUND SEWER LINE
T UNDERGROUND TELEPHONE LINE
W UNDERGROUND WATER LINE
OHW OVERHEAD WIRES
CONTROL POINT
PROPERTY LINE
FENCE
OVERHEAD WIRE
GUARD RAIL
W MONITORING WELL

COMMONWEALTH OF MASSACHUSETTS
RUSSELL J. TITMUSS
STRUCTURAL
No. 46514
REGISTERED PROFESSIONAL ENGINEER

R. J. Titmuss
12/11/15

DATUM AND TIDE TABLE	
100 YEAR FLOOD	+17.43
HTL	+11.70
MHW	+9.75
NAVD88	+5.43
NGVD 29	+4.57
MLW	0.0

DRAWING LIST, LEGEND, ABBREVIATIONS & GENERAL NOTES

WHARF REPLACEMENT
PROJECT–PHASE I
TOWN OF PLYMOUTH
PLYMOUTH, MA
DECEMBER 2015

REVISIONS

BCE Bourne Consulting Engineering, PC
3 Beal Street
Franklin, MA 02038
TEL. (508) 533-6666 FAX. (508) 533-0600

DRAWN: JSF
CHECKED: RJT
APPROVED: RJT
DATE: 12/07/15

DRAWING NO. 34032-01-02
SHEET 2 OF 27

File: X:\34946-\34032 PLYMOUTH T WHARF PHASE 1\FINAL DESIGN\BID #2\SHT-02 GEN NOTES.DWG - 11/12/2012 1:02 PM

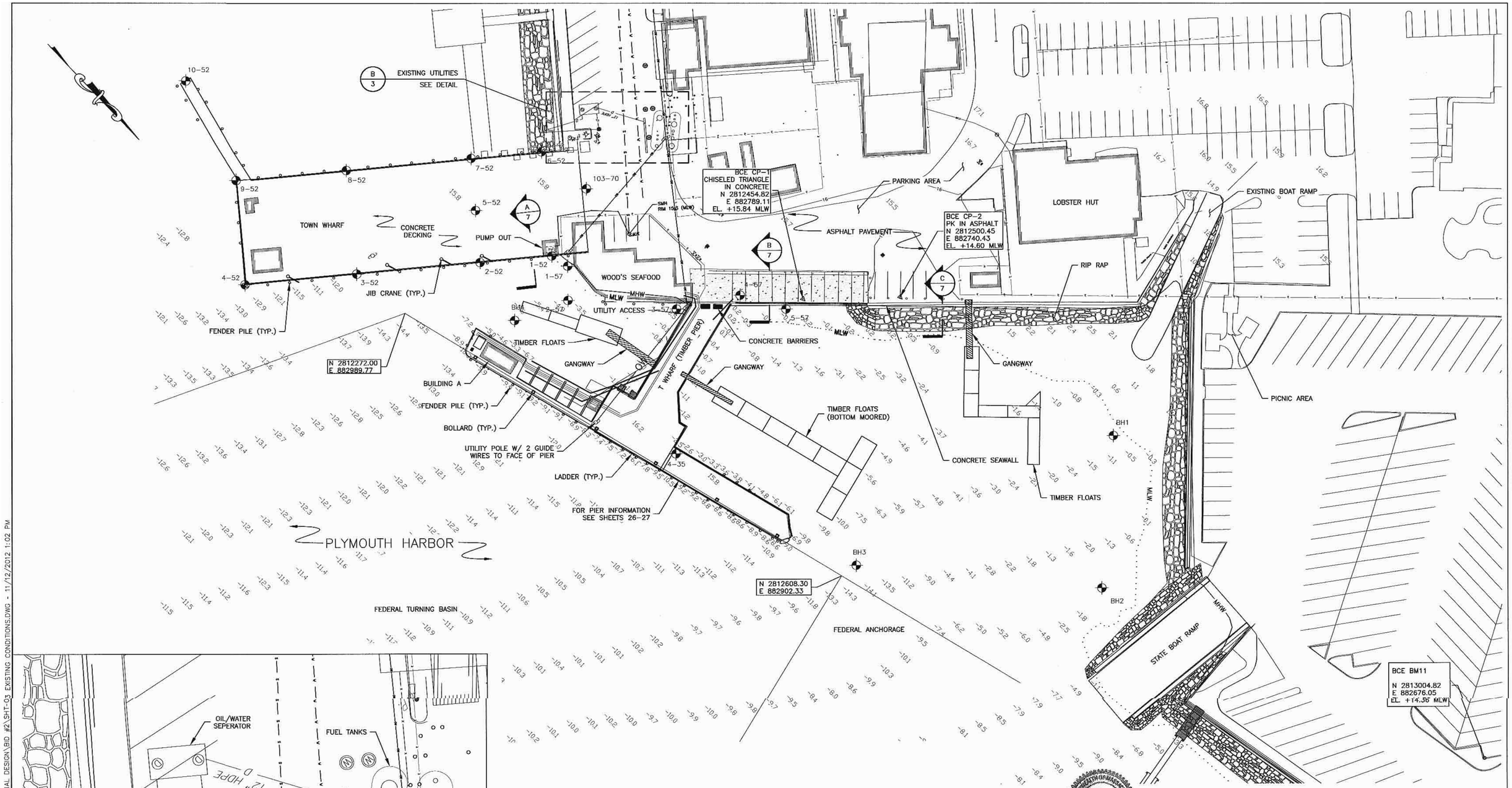

A/3 EXISTING CONDITIONS–PLAN

SCALE: 1"=30'-0"

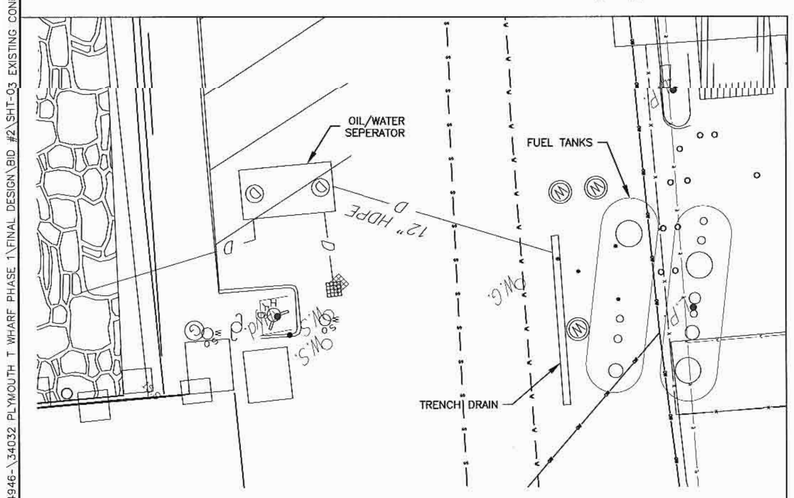

B/3 EXISTING UTILITIES–PLAN

SCALE: 1"=10'-0"

NOTES:
1. SEE SHEET 2 FOR GENERAL NOTES & LEGEND

RUSSELL J. TITMUSS STRUCTURAL No. 46514 REGISTERED PROFESSIONAL ENGINEER COMMONWEALTH OF MASSACHUSETTS

11/12/15

EXISTING CONDITIONS PLAN

WHARF REPLACEMENT PROJECT–PHASE I

TOWN OF PLYMOUTH
PLYMOUTH, MA
DECEMBER 2015

DATUM AND TIDE TABLE	
100 YEAR FLOOD	+17.43
HTL	+11.70
MHW	+9.75
NAVD88	+5.43
NGVD 29	+4.57
MLW	0.0

0 30 60
SCALE: 1" = 30'

REVISIONS

BCE Bourne Consulting Engineering, PC
3 Beat Street
Franklin, MA 02038
TEL. (508) 533-6666 FAX. (508) 533-0600

DRAWN: JSF
CHECKED: RJT
APPROVED: RJT
DATE: 12/07/15

DRAWING NO. 34032-01-03

File: X:\34946-\34032 PLYMOUTH T WHARF PHASE 1\FINAL DESIGN\BID #2\SHT-03 EXISTING CONDITIONS.DWG - 11/12/2012 1:02 PM

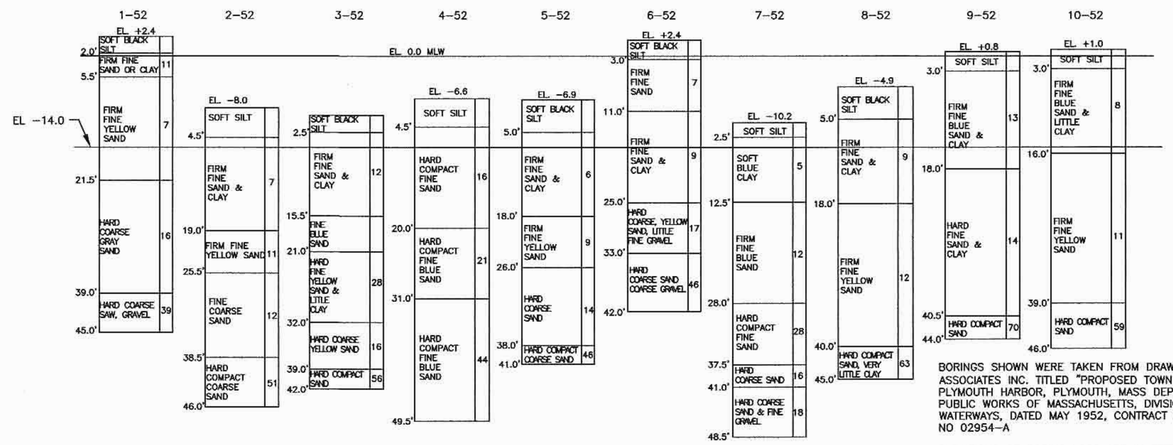

BORINGS SHOWN WERE TAKEN FROM DRAWING BY DUFFILL ASSOCIATES INC. TITLED "PROPOSED TOWN PIER PLYMOUTH HARBOR, PLYMOUTH, MASS DEPARTMENT OF PUBLIC WORKS OF MASSACHUSETTS, DIVISION OF WATERWAYS, DATED MAY 1952, CONTRACT NO. 1225 ACC. NO 02954–A

ELEVATIONS OF BORING LOGS ARE IN FEET AND TENTHS ABOVE THE PLANE OF MEAN LOW WATER.

MINUS ELEVATIONS SHOW DEPTHS BELOW PLANE OF MEAN LOW WATER.

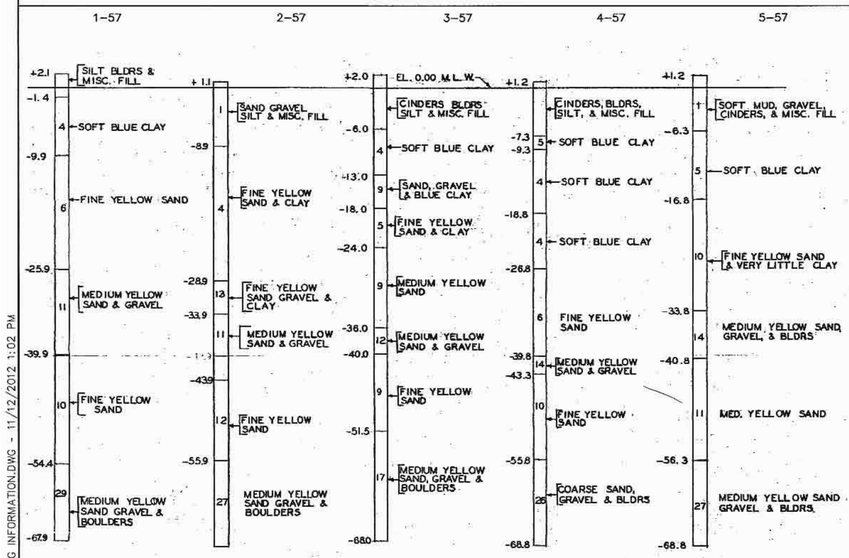

BORINGS SHOWN WERE TAKEN FROM DRAWINGS BY DUFFILL ASSOCIATES INC. TITLED "PROPOSED TOWN WHARF CONSTRUCTION, PLYMOUTH, DEPARTMENT OF PUBLIC WORKS OF MASSACHUSETTS, DIVISION OF WATERWAYS, DATED JANUARY 1959, CONTRACT NO. 1912 ACC. NO. 03864–F."

ELEVATIONS OF BORING LOGS ARE IN FEET AND TENTHS ABOVE THE PLANE OF MEAN LOW WATER.

MINUS ELEVATIONS SHOW DEPTHS BELOW PLANE OF MEAN LOW WATER

FIGURES IN BORING LOGS INDICATE NUMBER OF BLOWS TO DRIVE ONE INCH SAMPLING PIPE ONE FOOT, USING A 140 LB. WEIGHT FALLING THRITY INCHES.

BORINGS TAKEN OCT 18, 1957 BY CARR CONSTRUCTION CO. BOSTON, MA

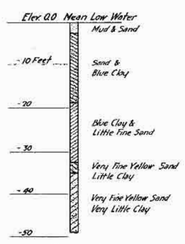

BORING No. 4

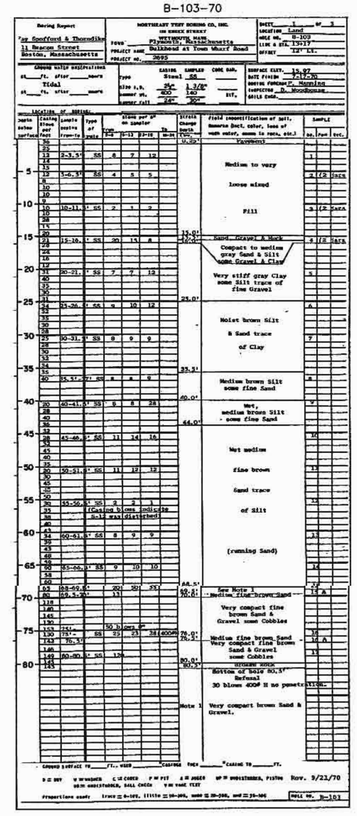

BORINGS SHOWN WERE TAKEN FROM DRAWING BY FAY, SPOFFARD, & THORNDIKE, INC. TITLED "PROPOSED HARBOR IMPROVEMENTS REPAIRS TO BULKHEAD PLYMOUTH HARBOR, PLYMOUTH, DEPARTMENT OF PUBLIC WORKS OF MASSACHUSETTS, DIVISION OF WATERWAYS, DATED FEBRUARY 1971, CONTRACT NO 2725 ACC. NO 04868–E

ELEVATIONS OF BORING LOGS ARE IN FEET AND TENTHS ABOVE THE PLANE OF MEAN LOW WATER.

MINUS ELEVATIONS SHOW DEPTHS BELOW PLANE OF MEAN LOW WATER.

FIGURES IN BORING LOGS INDICATE NUMBER OF BLOWS TO DRIVE ONE INCH SAMPLING PIPE ONE FOOT, USING A 140 LB. WEIGHT FALLING THIRTY INCHES.

MAINE TEST BORINGS, INC.
BREWER, MAINE 04412

CLIENT: Bourne Consulting Engineers
SHEET
HOLE NO. BH-1
DRILLER: Brad Enos
PROJECT NAME: T-Wharf Soil Borings & Probes
LINE & STATION
M.T.B. JOB NUMBER: 07-225
LOCATION: Plymouth, MA
OFFSET

GROUND WATER OBSERVATIONS
BH–1

CASING	SAMPLER	CORE BARREL	DATE 10/31/2007 Start	DATE 11/1/2007 Finish
NW 3" 300# 16"	SS 1 3/8" 140# 30"		SURFACE ELEVATION	

TYPE
SIZE I.D.
HAMMER WT.
HAMMER FALL

CASING BLOWS PER FOOT	SAMPLE NO.	O.D.	PEN.	REC.	DEPTH @ BOT.	BLOWS PER 6" ON SAMPLER 0-6	6-12	12-18	18-24	LAKE BEDS	DEPTH	STRATUM DESCRIPTION
4												
6	1D	2"	24"		2.0	3	6	5	1			
3												
2												
2												
4												
2	2D	2"	24"		7.0	3	1	WOH	1			Black & Brown Organic Silt & Sand
3												
3												
3												
3												
4	3D	2"	24"		12.0	WOR	3	4	5			
15												
13											13.5	
12												
15												
14	4D	2"	24"		17.0	2	WOH	WOH	WOH			
14												
19												Gray Silt & Sand w/Trace of Gravel
19												
19												
19	5D	2"	24"		22.0	1	2	3	2			
20												
20											24.0	
18												
20												
22	6D	2"	24"		27.0	7	5	5	5			
18												
17												
22												
31												
25	7D	2"	24"		32.0	WOR	WOR	1	3			
24												
42												
58												
13												
24	8D	2"	24"		37.0	WOR	3	10	14			
30												
34	9D	2"	24"		42.0	2	7	12	30			
43												
73												
54												
54												Brown Silty Sand w/Gravel
50	10D	2"	24"		47.0	WOR	WOR	WOR	WOR			
56												
106												
	11D	2"	24"		51.0	WOR	WOR	WOR	WOR			
											51.0	Bottom of Boring @ 51.0'

MAINE TEST BORINGS, INC.
BREWER, MAINE 04412

CLIENT: Bourne Consulting Engineers
SHEET
HOLE NO. BH-2
DRILLER: Brad Enos
PROJECT NAME: T-Wharf Soil Borings & Probes
LINE & STATION
M.T.B. JOB NUMBER: 07-225
LOCATION: Plymouth, MA
OFFSET

GROUND WATER OBSERVATIONS
BH–2

CASING	SAMPLER	CORE BARREL	DATE 10/30/2007 Start	DATE 10/31/2007 Finish
NW 3" 300# 16"	SS 1 3/8" 140# 30"		SURFACE ELEVATION	

TYPE
SIZE I.D.
HAMMER WT.
HAMMER FALL

CASING BLOWS PER FOOT	SAMPLE NO.	O.D.	PEN.	REC.	DEPTH @ BOT.	BLOWS PER 6" ON SAMPLER 0-6	6-12	12-18	18-24	LAKE BEDS	DEPTH	STRATUM DESCRIPTION
WOC												
WOH	1D	2"	24"		2.0	WOR	WOR	WOR	WOH			
WOC												
WOC												
WOH												
WOH												
WOH	2D	2"	24"		7.0	WOR	WOR	WOR	WOH			Black Sandy Organic Silt & Sand
WOH												
WOH												
WOH												
WOH	3D	2"	24"		12.0	WOR	WOR	WOR	WOR			
1											10.5	
4											12.5	Gray Sandy Clayey Silt
9											14.0	Black Organic Sandy Silt
9	4D	2"	24"		17.0	WOR	WOR	1	5			Olive Brown Sandy Clay & Silt
15												
24											18.5	
40												
41												
54	5D	2"	24"		22.0	11	11	14	17			Olive Brown Gravelly Sandy Silt
60												
64											23.5	
53												
61												
57	5D	2"	24"		27.0	4	8	10	12			
53												
43												
37												Brown Silt & Sand
40												
40	7D	2"	24"		32.0	WOR	2	3	6			
38												
39											33.5	
53												
58												
66	8D	2"	24"		37.0	5	10	19	26			Brown Silty Gravelly Sand
57											38.0	
120												
121												Brown Silty Sand w/Trace of Gravel
	9D	2"	18"		41.5	14	23	75			41.5	Brown Silty Sand w/Trace of Gravel
												Bottom of Boring @ 41.5'

MAINE TEST BORINGS, INC.
BREWER, MAINE 04412

CLIENT: Bourne Consulting Engineers
SHEET
HOLE NO. BH-3
DRILLER: Brad Enos
PROJECT NAME: T-Wharf Soil Borings & Probes
LINE & STATION
M.T.B. JOB NUMBER: 07-225
LOCATION: Plymouth, MA
OFFSET

GROUND WATER OBSERVATIONS
BH–3

CASING	SAMPLER	CORE BARREL	DATE 10/31/2007 Start	DATE 10/31/2007 Finish
NW 3" 300# 16"	SS 1 3/8" 140# 30"		SURFACE ELEVATION	

TYPE
SIZE I.D.
HAMMER WT.
HAMMER FALL

CASING BLOWS PER FOOT	SAMPLE NO.	O.D.	PEN.	REC.	DEPTH @ BOT.	BLOWS PER 6" ON SAMPLER 0-6	6-12	12-18	18-24	LAKE BEDS	DEPTH	STRATUM DESCRIPTION
WOC												
WOC	1D	2"	24"		2.0	WOR	WOR	WOR	WOR			
WOC												
WOC												
WOC												
WOC	2D	2"	24"		7.0	WOR	WOR	WOR	WOR			
WOC											8.2	Black Sandy Organic Silt
WOF											9.5	Gray Sandy Clayey Silt
10												
8												
13	3D	2"	24"		12.0	4	7	7	9			
23												
28												
31												Olive Brown Silty Sand
4												
14	4D	2"	24"		17.0	WOR	6	8	8			
27											17.5	
28												
31												
24												
32	5D	2"	24"		22.0	11	9	8	11			
30												
27												
34												
28												
35	6D	2"	24"		27.0	19	10	9	7			
45												
47												
67												Brown Silty Sand
39												
35	7D	2"	24"		32.0	3	3	4	15			
45												
42												
56												
5												
13	8D	2"	24"		37.0	1	4	14	21			
18												
28												
42												
	9D	2"	24"	16"	41.3	7	25	50			41.3	Brown Silty Sand
												Bottom of Boring @ 40.3'

MAINE TEST BORINGS, INC.
BREWER, MAINE 04412

CLIENT: Bourne Consulting Engineers
SHEET
HOLE NO. BH-4
DRILLER: Brad Enos
PROJECT NAME: T-Wharf Soil Borings & Probes
LINE & STATION
M.T.B. JOB NUMBER: 07-225
LOCATION: Plymouth, MA
OFFSET

GROUND WATER OBSERVATIONS
BH–4

CASING	SAMPLER	CORE BARREL	DATE 11/1/2007 Start	DATE 11/2/2007 Finish
NW 3" 300# 16"	SS 1 3/8" 140# 30"		SURFACE ELEVATION	

TYPE
SIZE I.D.
HAMMER WT.
HAMMER FALL

CASING BLOWS PER FOOT	SAMPLE NO.	O.D.	PEN.	REC.	DEPTH @ BOT.	BLOWS PER 6" ON SAMPLER 0-6	6-12	12-18	18-24	LAKE BEDS	DEPTH	STRATUM DESCRIPTION
WOC												
WOC	1D	2"	24"		2.0	WOR	WOR	WOR	WOR			
WOC												Black Organic Sandy Silt
WOH												
WOH											5.5	
20												
21	2D	2"	24"		7.0	WOR	8	17	9			
29												
17												
17												
1												
8	3D	2"	24"		12.0	3	5	7	6			
19												
19												
25												
21												
24	4D	2"	24"		17.0	8	7	9	9			
24												
21												
29												
29												
21	5D	2"	24"		22.0	5	3	3	4			
24												
29												Brown Silty Sand w/Trace of Gravel
50												
54												
55	6D	2"	24"		27.0	19	19	12	16			
56												
59												
69												
41												
75	7D	2"	24"		32.0	40	20	19	20			
86												
198												
209												
81												
75	8D	2"	24"		37.0	29	11	8	11			
98												
109												
105												
	9D	2"	24"		42.0	WOR	WOR	4	11			
											42.0	Brown Silty Sand w/Trace of Gravel
												Bottom of Boring @ 42.0'

STATE OF MASSACHUSETTS
RUSSELL J. TITMUSS
STRUCTURAL
No. 46514
REGISTERED PROFESSIONAL ENGINEER
11/12/15

BORING LOGS

WHARF REPLACEMENT PROJECT–PHASE I

TOWN OF PLYMOUTH
PLYMOUTH, MA
DECEMBER 2015

REVISIONS

Bourne Consulting Engineering, PC
3 Bent Street
Franklin, MA 02038
TEL. (508) 533-6666 FAX. (508) 533-0600

DRAWN: JSF
CHECKED: RJT
APPROVED: RJT
DATE: 12/07/15

DRAWING NO. 34032-01-04
SHEET 4 OF 27

File: X:\34946-\34032 PLYMOUTH T WHARF PHASE 1\FINAL DESIGN\BID #2\SHT-04 BORING INFORMATION.DWG - 11/12/2012 1:02 PM

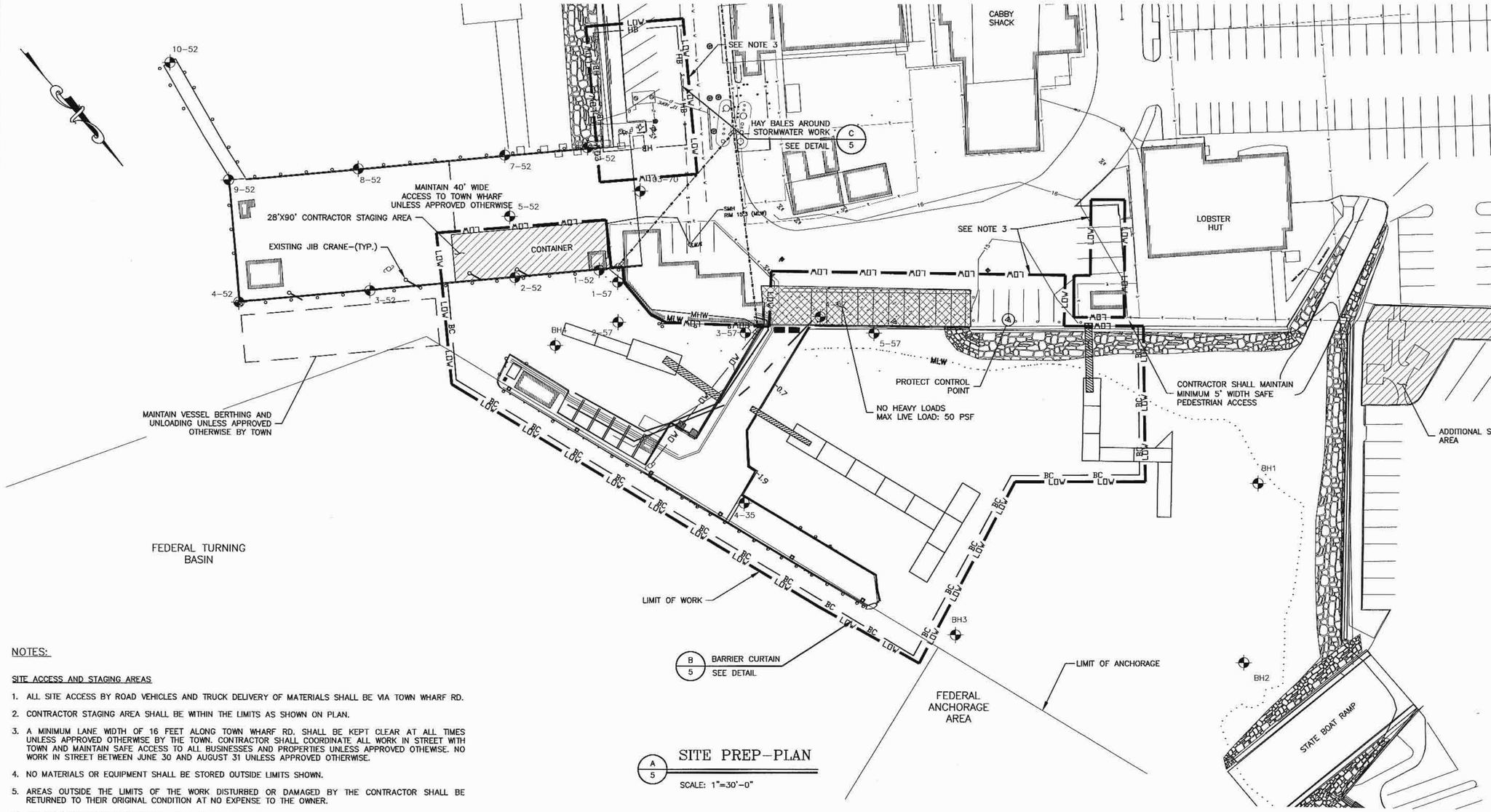

A 5 SITE PREP-PLAN

SCALE: 1"=30'-0"

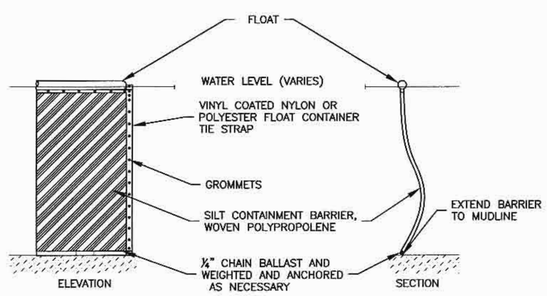

B 5 BARRIER CURTAIN DETAIL

SCALE: N.T.S.

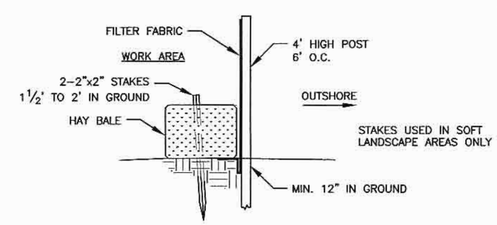

C 5 SILTATION FENCE WITH HAYBALES

SCALE: N.T.S.

0 30 60

SCALE: 1" = 30'

NOTES:

SITE ACCESS AND STAGING AREAS

1. ALL SITE ACCESS BY ROAD VEHICLES AND TRUCK DELIVERY OF MATERIALS SHALL BE VIA TOWN WHARF RD.
2. CONTRACTOR STAGING AREA SHALL BE WITHIN THE LIMITS AS SHOWN ON PLAN.
3. A MINIMUM LANE WIDTH OF 16 FEET ALONG TOWN WHARF RD. SHALL BE KEPT CLEAR AT ALL TIMES UNLESS APPROVED OTHERWISE BY THE TOWN. CONTRACTOR SHALL COORDINATE ALL WORK IN STREET WITH TOWN AND MAINTAIN SAFE ACCESS TO ALL BUSINESSES AND PROPERTIES UNLESS APPROVED OTHEWISE. NO WORK IN STREET BETWEEN JUNE 30 AND AUGUST 31 UNLESS APPROVED OTHERWISE.
4. NO MATERIALS OR EQUIPMENT SHALL BE STORED OUTSIDE LIMITS SHOWN.
5. AREAS OUTSIDE THE LIMITS OF THE WORK DISTURBED OR DAMAGED BY THE CONTRACTOR SHALL BE RETURNED TO THEIR ORIGINAL CONDITION AT NO EXPENSE TO THE OWNER.
6. ALL EXISTING PAVEMENT DAMAGED SHALL BE REPAIRED AT NO ADDITIONAL COST TO THE OWNER.
7. THE CONTRACTOR SHALL BE SOLELY RESPONSIBLE FOR SITE SECURITY AND JOB SAFETY. ALL CONSTRUCTION ACTIVITY SHALL BE IN ACCORDANCE WITH OSHA AND LOCAL REGULATIONS AND STANDARDS.
8. CONTRACTOR SHALL BE RESPONSIBLE FOR PROTECTING ALL EXISTING STRUCTURES TO REMAIN.
9. TOWN WHARF LIVE LOAD SHALL NOT EXCEED 200 PSF OR MAX WHEEL LOAD: 6 TONS OR MAX COMBINED AXLE LOAD: 12 TONS
10. CONTRACTOR SHALL SUBMIT DETAILS OF ALL MATERIALS OR EQUIPMENT SHOWING COMPLIANCE WITH ABOVE LIMITS FOR APPROVAL PRIOR TO LOADING.

ENVIRONMENTAL

11. CONTRACTOR SHALL COMPLY WITH ALL ENVIRONMENTAL REQUIREMENTS AND PERMIT CONDITIONS.
12. CONTRACTOR SHALL CONFINE ALL OTHER TEMPORARY STOCKPILES OF EXCAVATED MATERIAL OR IMPORTED FILL USING HAY BALES AND FILTER FABRIC.
13. CONTRACTOR SHALL PROVIDE CONTAINMENT FOR ALL WORK IN OR OVER WATER. BOTTOM WEIGHTED SILT CURTAINS SHALL BE PROVIDED TO ENCLOSE WORK LIMITS. SILT CURTAINS SHALL BE INSTALLED PRIOR TO COMMENCEMENT AND REMOVED AFTER COMPLETION OF WORK IN EACH AREA. SILT CURTAIN INSTALLATION AND PHASING SCHEDULE SHALL BE SUBMITTED BY CONTRACTOR. SILT CURTAINS SHALL BE MAINTAINED IN PROPER WORKING CONDITION DURING CONSTRUCTION.
14. CONTRACTOR SHALL PROVIDE CONFINED CONCRETE TRUCK WASHDOWN AREA AT A LOCATION TO BE APPROVED BY THE ENGINEER. WASHDOWN AREA SHALL INCLUDE PROTECTION TO PAVEMENT, A PERIMETER WALL AND A FILTER FABRIC LINER. NO RUNOFF CONTAINING CEMENT OR OTHER SUSPENDED SOLIDS WILL BE PERMITTED. ALL MATERIALS SHALL BE COMPLETELY REMOVED ON COMPLETION OF CONSTRUCTION AND DISPOSED OF AT A LICENSED LOCATION.

DEMOLITION

15. ALL EXCESS MATERIALS SHALL BECOME THE PROPERTY OF THE CONTRACTOR & BE DISPOSED OF OFF SITE.

COMMONWEALTH OF MASSACHUSETTS RUSSELL J. TITMUSS STRUCTURAL No. 46514 REGISTERED PROFESSIONAL ENGINEER

R.J. Titmuss 12/11/15

SITE PREPARATION

WHARF REPLACEMENT PROJECT-PHASE I

TOWN OF PLYMOUTH
PLYMOUTH, MA
DECEMBER 2015

REVISIONS

BCE Bourne Consulting Engineering, PC
3 Beaf Street
Franklin, MA 02038
TEL. (508) 533-0005 FAX. (508) 533-0030

DRAWN: JSF
CHECKED: RJT
APPROVED: RJT
DATE: 12/07/15

DRAWING NO. 34032-01-05

SHEET 5 OF 27

File: X:\34946-\34032 PLYMOUTH T WHARF PHASE 1\FINAL DESIGN\BID #2\SHT-05 SITE PREP PLAN.DWG - 11/12/2012 1:02 PM

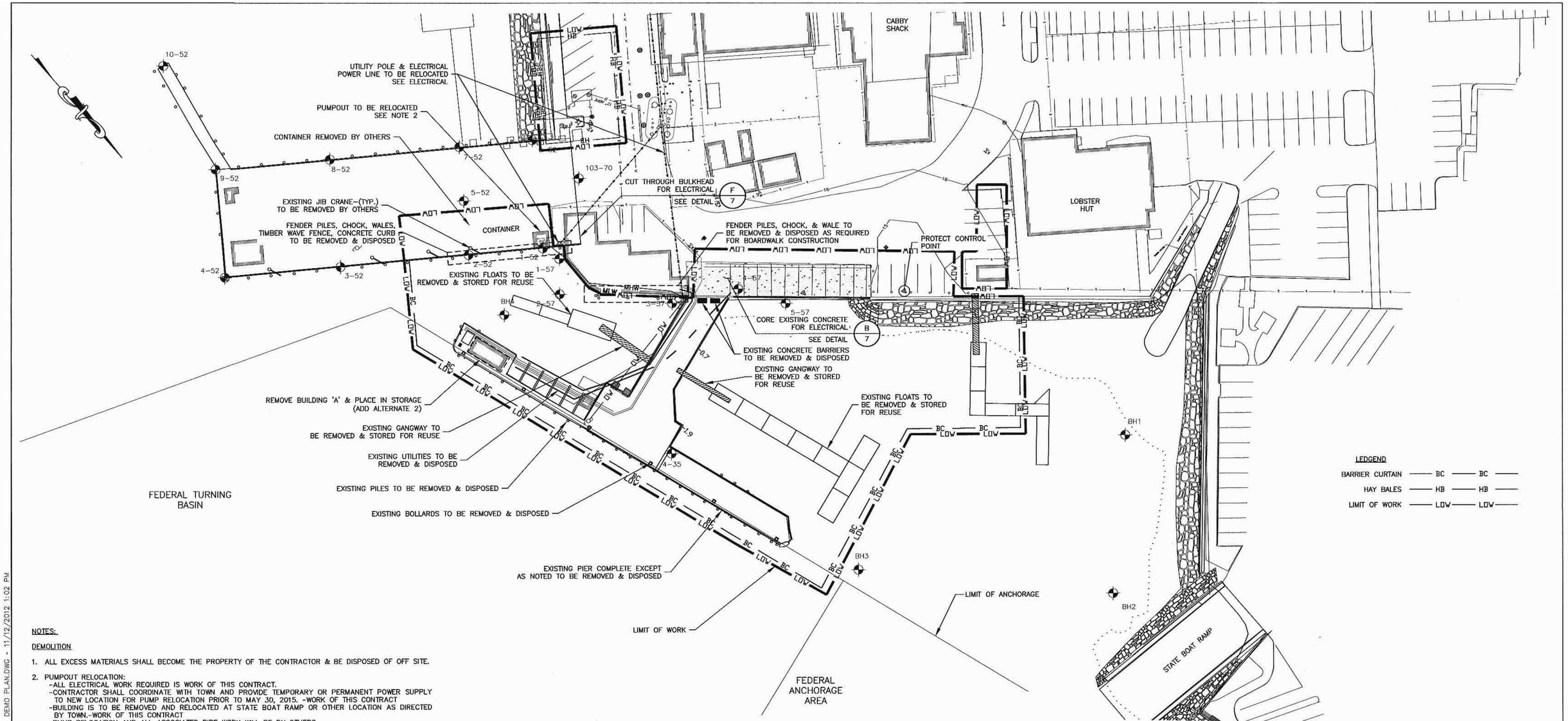

A 6 DEMOLITION–PLAN

SCALE: 1"=30'–0"

NOTES:

DEMOLITION

1. ALL EXCESS MATERIALS SHALL BECOME THE PROPERTY OF THE CONTRACTOR & BE DISPOSED OF OFF SITE.
2. PUMPOUT RELOCATION:
   - -ALL ELECTRICAL WORK REQUIRED IS WORK OF THIS CONTRACT.
   - -CONTRACTOR SHALL COORDINATE WITH TOWN AND PROVIDE TEMPORARY OR PERMANENT POWER SUPPLY TO NEW LOCATION FOR PUMP RELOCATION PRIOR TO MAY 30, 2015. -WORK OF THIS CONTRACT
   - -BUILDING IS TO BE REMOVED AND RELOCATED AT STATE BOAT RAMP OR OTHER LOCATION AS DIRECTED BY TOWN.-WORK OF THIS CONTRACT
   - -PUMP RELOCATION AND ALL ASSOCIATED PIPE WORK WILL BE BY OTHERS.

COMMONWEALTH OF MASSACHUSETTS RUSSELL J. TITMUSS STRUCTURAL No. 46514 REGISTERED PROFESSIONAL ENGINEER

R.J. Titmuss 12/11/15

DEMOLITION PLAN

WHARF REPLACEMENT
PROJECT–PHASE I
TOWN OF PLYMOUTH
PLYMOUTH, MA
DECEMBER 2015

0 30 60
SCALE: 1" = 30'

REVISIONS

BCE Bourne Consulting Engineering, PC
3 Beal Street
Franklin, MA 02038
TEL. (508) 533-6666 FAX. (508) 533-0600

DRAWN: JSF
CHECKED: RJT
APPROVED: RJT
DATE: 12/07/15

DRAWING NO. 34032-01-06

SHEET 6 OF 27

File: X:\34946-\34032 PLYMOUTH T WHARF PHASE 1\FINAL DESIGN\BID #2\SHT-06 DEMO PLAN.DWG - 11/12/2012 1:02 PM

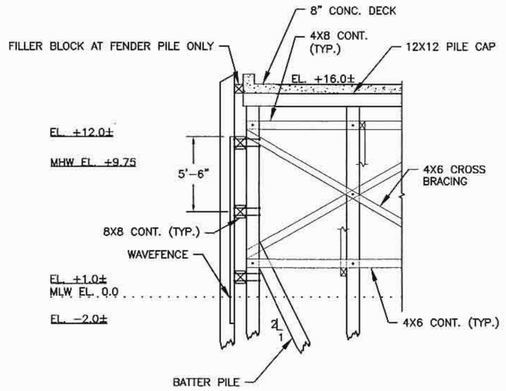

A/7 EXISTING TOWN PIER SECTION

SCALE: 3/16"=1'-0"

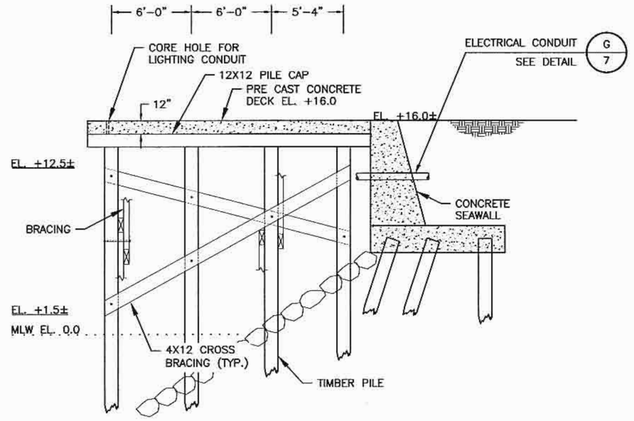

B/7 EXISTING PIER @ T-WHARF-SECTION

SCALE: 3/16"=1'-0"

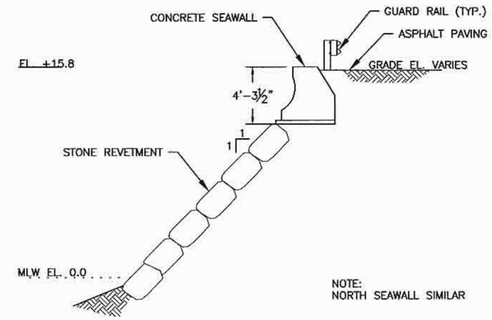

C/7 EXISTING SEAWALL

SCALE: 3/16"=1'-0"

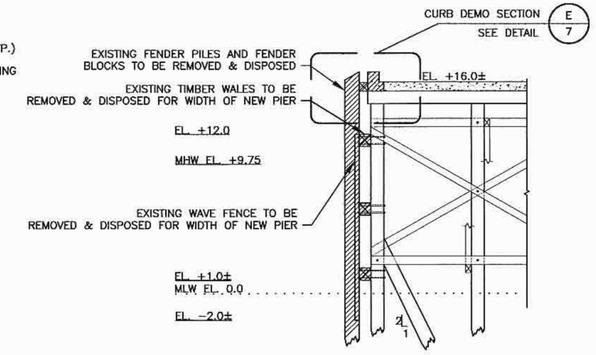

D/7 TOWN PIER DEMO SECTION

SCALE: 3/16"=1'-0"

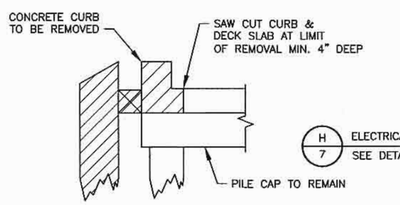

E/7 TOWN PIER CURB DEMO SECTION

SCALE: 1/2"=1'-0"

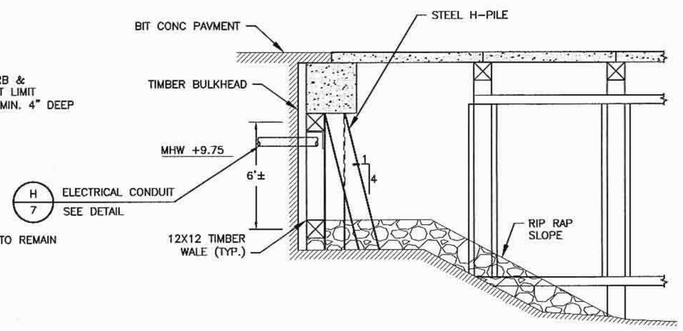

F/7 INSHORE BULKHEAD

SCALE: 1/4"=1'-0"

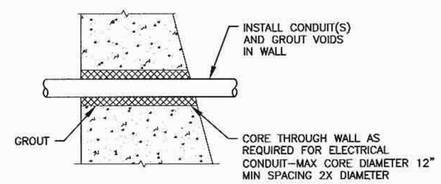

G/7 CONDUIT @ SEAWALL

SCALE: 1/2"=1'-0"

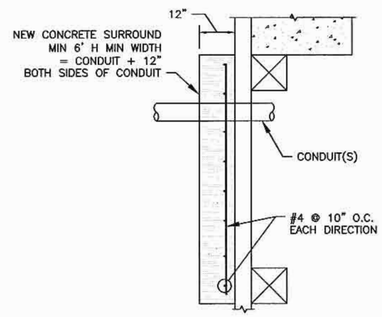

H/7 CONDUIT @ BULKHEAD

SCALE: 1/2"=1'-0"

NOTE: DRAIN LINE SIMILAR

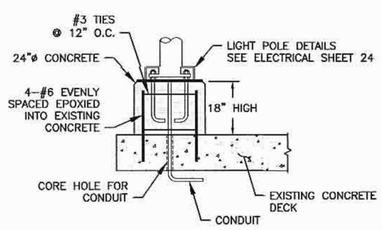

I/7 LIGHT POST-EXISTING CONC. DECK

SCALE: 1/2"=1'-0"

COMMONWEALTH OF MASSACHUSETTS
RUSSELL J. TITMUSS
STRUCTURAL
No. 46514
REGISTERED PROFESSIONAL ENGINEER

R.J. Titmuss
12/11/15

EXISTING SECTIONS

WHARF REPLACEMENT
PROJECT-PHASE I
TOWN OF PLYMOUTH
PLYMOUTH, MA
DECEMBER 2015

REVISIONS

BCE Bourne Consulting Engineering, PC
3 Beal Street
Franklin, MA 02038
TEL. (508) 533-6666 FAX. (508) 533-0600

DRAWN: JSF
CHECKED: RJT
APPROVED: RJT
DATE: 12/07/15

DRAWING NO. 34032-01-07

SHEET 7 OF 27

File: X:\34946-\34032 PLYMOUTH T WHARF PHASE 1\FINAL DESIGN\BID #2\SHT-07 EXISTING SECTIONS.DWG - 11/12/2012 1:02 PM

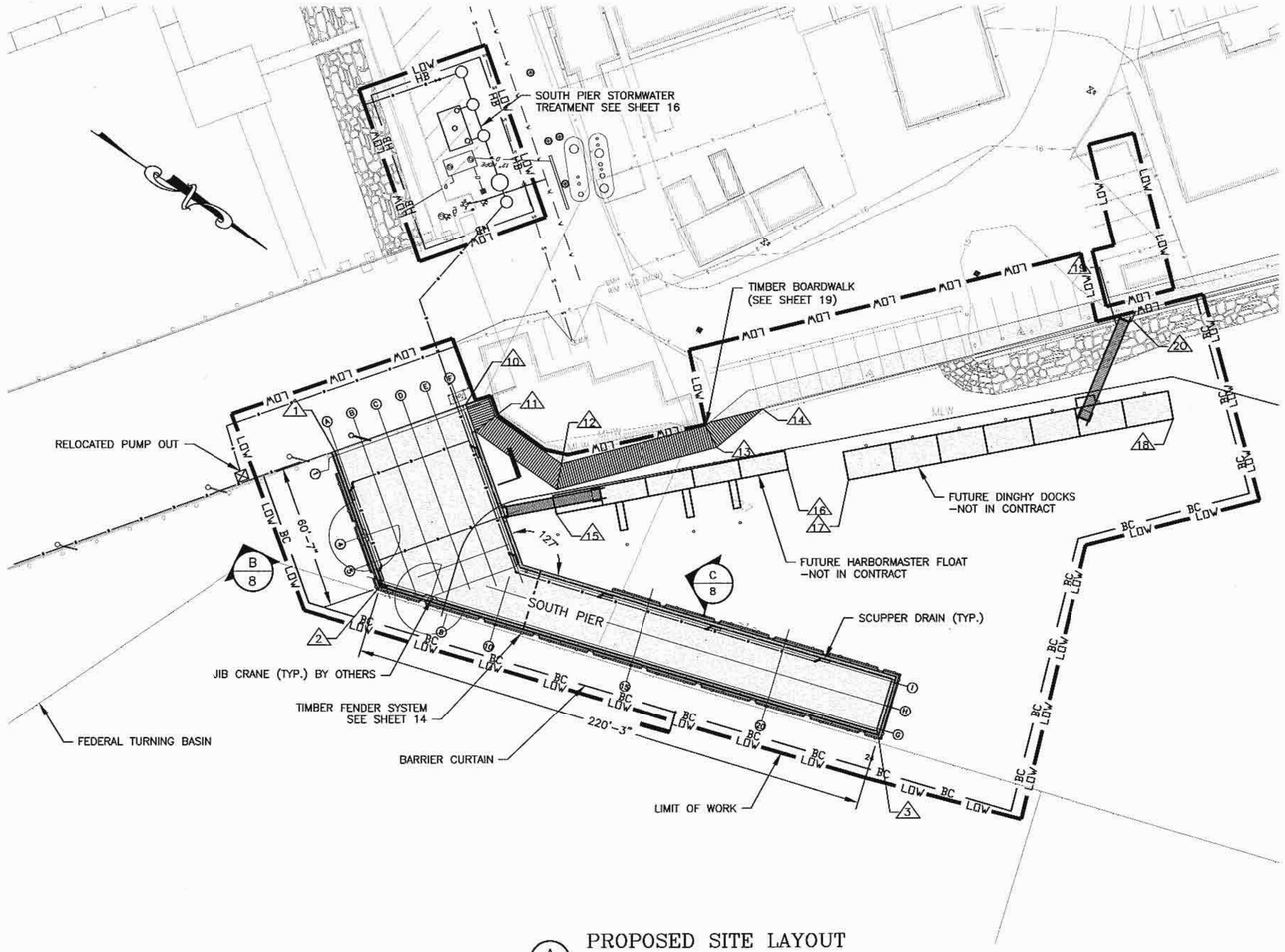

A/8 PROPOSED SITE LAYOUT

SCALE: 1"=30'-0"

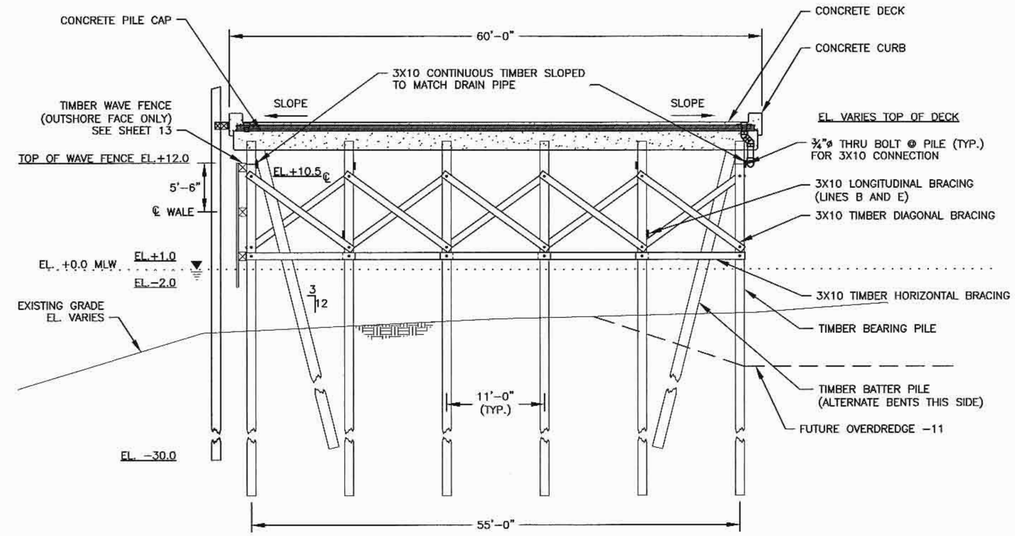

B/8 60' WIDE PIER

SCALE: 1/8" = 1'-0"

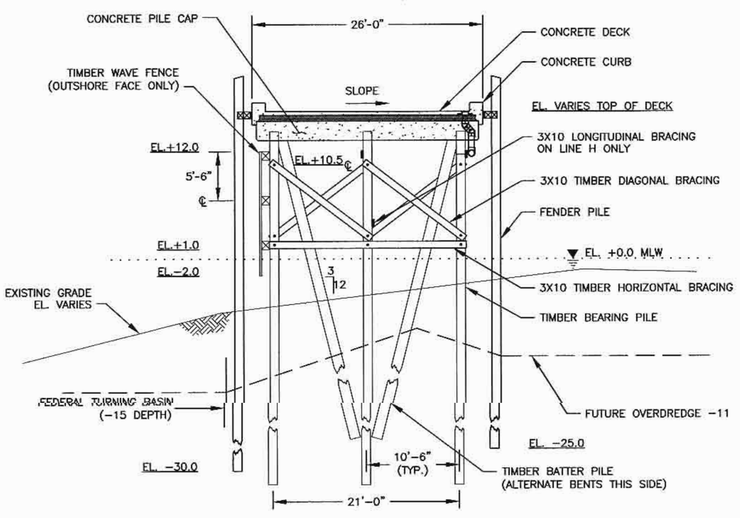

C/8 26' WIDE PIER

SCALE: 1/8" = 1'-0"

BARRIER CURTAIN	— BC — BC — BC —
HAY BALE	— HB — HB — HB —
CONTRACTOR STAGING	— — — —
LIMIT OF WORK	— LOW — LOW — LOW —

LAYOUT CONTROL POINTS			
1	N 2812279.81 E 882935.14	17	N 2812470.20 E 882831.92
2	N 2812324.23 E 882973.66	18	N 2812574.53 E 882738.56
3	N 2812535.72 E 882916.14	19	N 281532.27 E 882713.05
10	N 2812315.17 E 882888.72	20	N 2812537.03 E 882708.19
11	N 2812324.55 E 882896.34		
12	N 2812366.65 E 882899.33		
13	N 2812415.49 E 882848.89		
14	N 2812423.71 E 882825.09		
15	N 2812371.92 E 882908.34		
16	N 2812446.12 E 882841.30		

COMMONWEALTH OF MASSACHUSETTS
RUSSELL J. TITMUSS
STRUCTURAL
No. 46514
REGISTERED PROFESSIONAL ENGINEER
R.J. Titmuss
12/11/15

0 30 60
SCALE: 1" = 30'-0"

SITE LAYOUT /PIER SECTIONS

WHARF REPLACEMENT PROJECT-PHASE I

TOWN OF PLYMOUTH
PLYMOUTH, MA
DECEMBER 2015

REVISIONS

BCE Bourne Consulting Engineering, PC
3 Beal Street
Franklin, MA 02038
TEL. (508) 533-6666 FAX. (508) 533-0600

DRAWN: JSF
CHECKED: RJT
APPROVED: RJT
DATE: 12/07/15

DRAWING NO. 34032-01-08

SHEET 8 OF 27

File: X:\34946-\34032 PLYMOUTH T WHARF PHASE 1\FINAL DESIGN\BID #2\SHT-08 PROPOSED CONDITIONS.DWG - 11/12/2012 1:02 PM

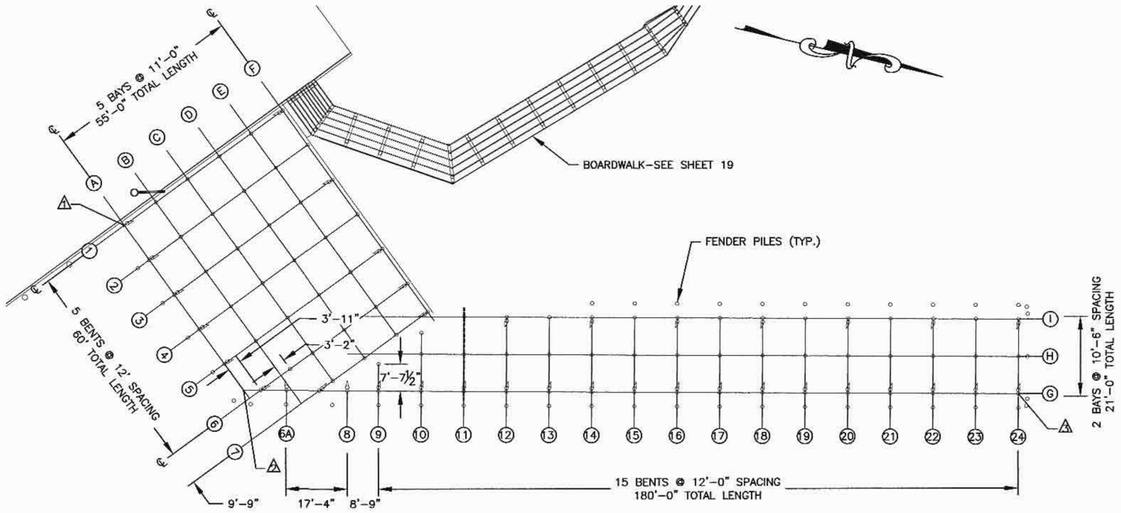

SOUTH PIER-PILE PLAN

A/9

SCALE: 1"=20'-0"

NOTES:
1. ALL BEARING & BATTER PILES TO BE DRIVEN TO 24 TON SAFE WORKING LOAD.
2. FENDER PILES TO BE DRIVEN AFTER CURB INSTALLATION.
3. FENDER PILE TIP ELEVATION VARIES:
   -BENT 6 TO 24, GRID G TIP EL. -30.0
   -ALL OTHERS TIP EL. -25.0
4. ALL PILES TO HAVE S.S. BAND PER SPECIFICATIONS.
5. ALL BEARING & BATTER PILES CUT OFF ELEVATIONS VARY TO SUIT PIER SLOPE.

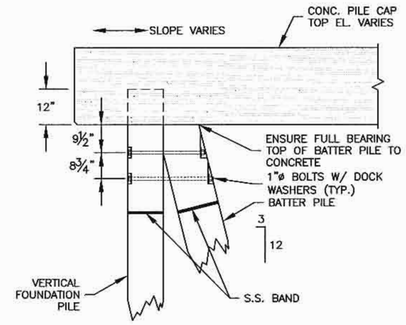

UPPER BATTER PILE CONNECTION

B/9

SCALE: 1/2"=1'-0"

NOTES:
1. NOTCH PILES FOR FULL BEARING.
2. CROSS BRACING & DRAIN PIPE SUPPORT NOT SHOWN FOR CLARITY.

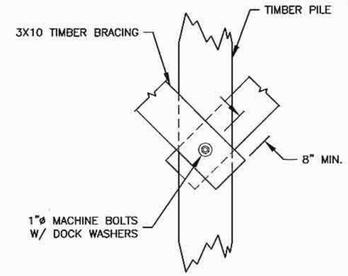

DIAGONAL BRACING CONNECTION DETAIL

C/9

SCALE: 3/4"=1'-0"

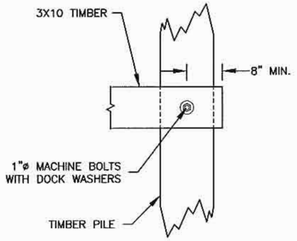

HORIZONTAL BRACING CONNECTION DETAIL

D/9

SCALE: 3/4"=1'-0"

COMMONWEALTH OF MASSACHUSETTS
RUSSELL J. TITMUSS
STRUCTURAL
No. 46514
REGISTERED
PROFESSIONAL ENGINEER

R.J. Titmuss
12/11/15

PILE PLAN & DETAILS

WHARF REPLACEMENT
PROJECT-PHASE I
TOWN OF PLYMOUTH
PLYMOUTH, MA
DECEMBER 2015

BCE Bourne Consulting Engineering, PC
3 Beal Street
Franklin, MA 02038
TEL. (508) 533-6666 FAX. (508) 533-0600

DRAWN:	JSF
CHECKED:	RJT
APPROVED:	RJT
DATE:	12/07/15

REVISIONS

DRAWING NO. 34032-01-09

SHEET 9 OF 27

File: X:\34946-\34032 PLYMOUTH T WHARF PHASE 1\FINAL DESIGN\BID #2\SHT-09 PIER PILE PLAN.DWG - 11/12/2012 1:02 PM

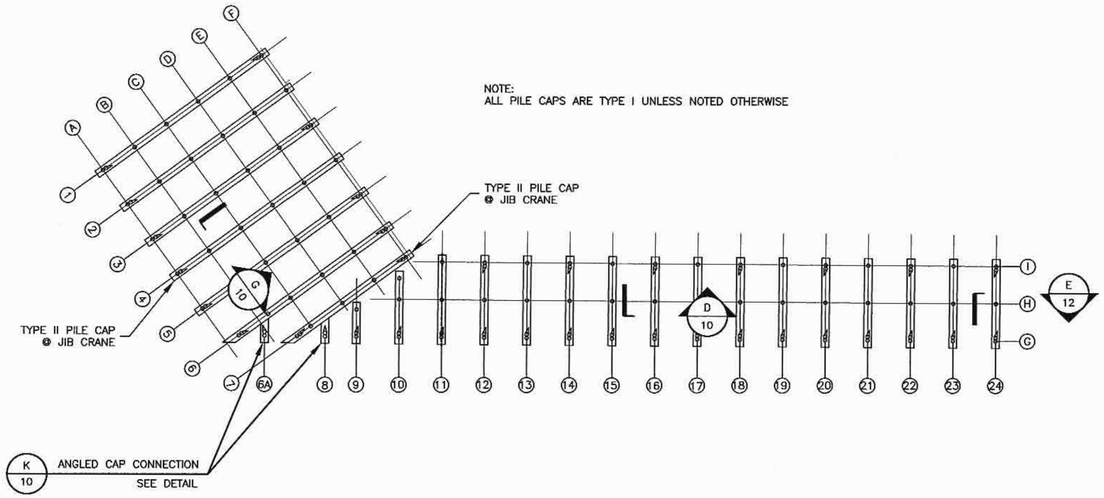

A 10 SOUTH PIER – PILE CAP PLAN

SCALE: 1"=20'-0"

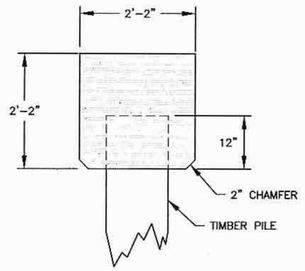

C 10 TYPE I PILE CAP–SECTION

SCALE: 3/4"=1'-0"

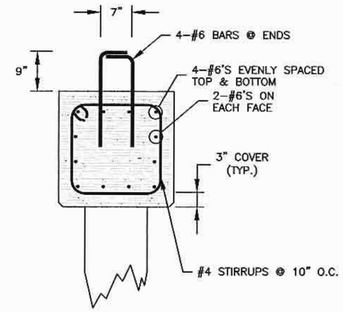

D 10 TYPE I PILE CAP REINFORCING (TYP.)

SCALE: 3/4"=1'-0"

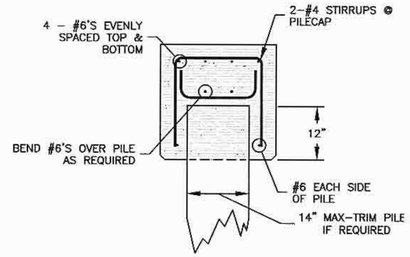

E 10 TYPE I PILE CAP REINFORCING @ PILE (TYP.)

SCALE: 3/4"=1'-0"

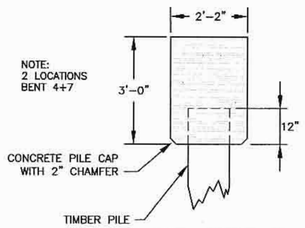

F 10 PILE CAP–TYPE II

SCALE: 1/2"=1'-0"

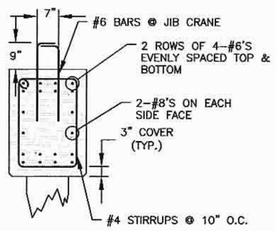

G 10 PILE CAP REINFORCING–TYPE II

SCALE: 1/2"=1'-0"

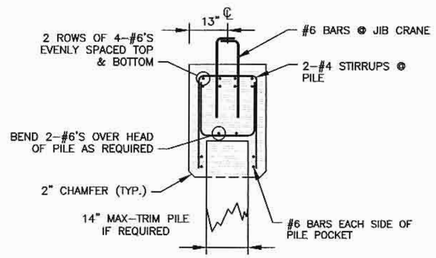

H 10 PILE CAP REINFORCING @ PILE–TYPE II

SCALE: 1/2"=1'-0"

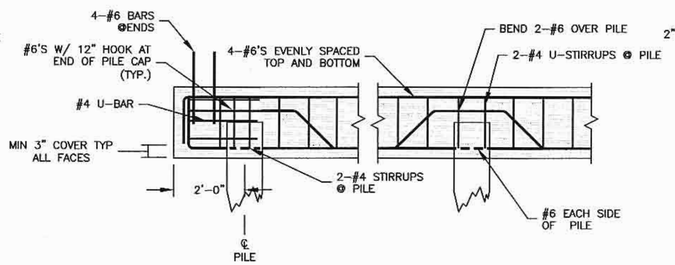

I 10 TYPE I PILE CAP REINFORCING

SCALE: 1/2"=1'-0"

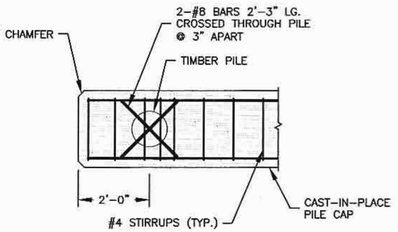

J 10 PILE CONNECTION

SCALE: 1/2"=1'-0"

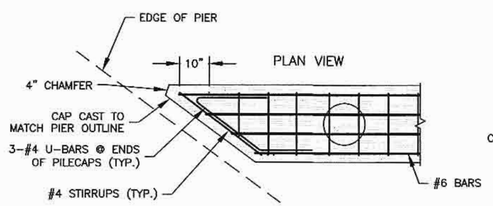

K 10 ANGLED PILE CAP (TYP.)

SCALE: 1/2"=1'-0"

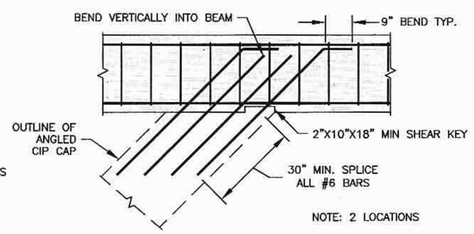

L 10 BENTS 6A,8 ANGLED CAP CONNECTION

SCALE: 1/2"=1'-0"

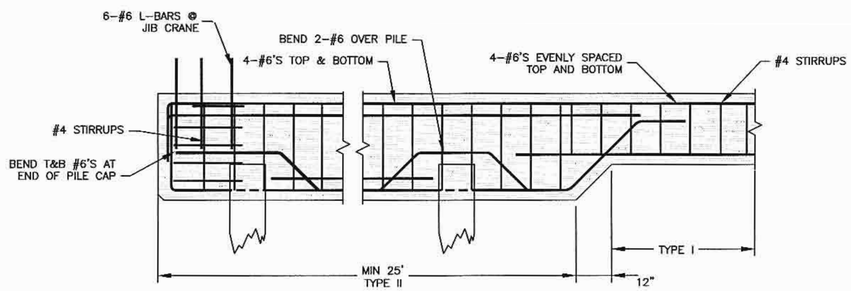

M 10 PILE CAP REINFORCMENT–TYPE II

SCALE: 1/2"=1'-0"

NOTES:
1. DETAILS SHOWN ARE BASED ON CAST IN PLACE PILE CAPS.
2. PILE CAP ELEVATIONS VARY TO MATCH FINISHED GRADE.
3. ALL PILE CAPS SLOPE TO MATCH FINISHED GRADE.

R.J. Tolman
12/11/15

PILE CAP LAYOUT PLAN AND DETAILS

WHARF REPLACEMENT
PROJECT–PHASE I
TOWN OF PLYMOUTH
PLYMOUTH, MA
DECEMBER 2015

BCE Bourne Consulting Engineering, PC
3 Beal Street
Franklin, MA 02038
TEL. (508) 533-6666 FAX. (508) 533-0600

DRAWN:	JSF
CHECKED:	RJT
APPROVED:	RJT
DATE:	12/07/15

REVISIONS

DRAWING NO. 34032-01-10

SHEET 10 OF 27

File: X:\34946-\34032 PLYMOUTH T WHARF PHASE 1\FINAL DESIGN\BID #2\SHT-10 PIER PILE CAP PLAN.DWG - 11/12/2012 1:02 PM

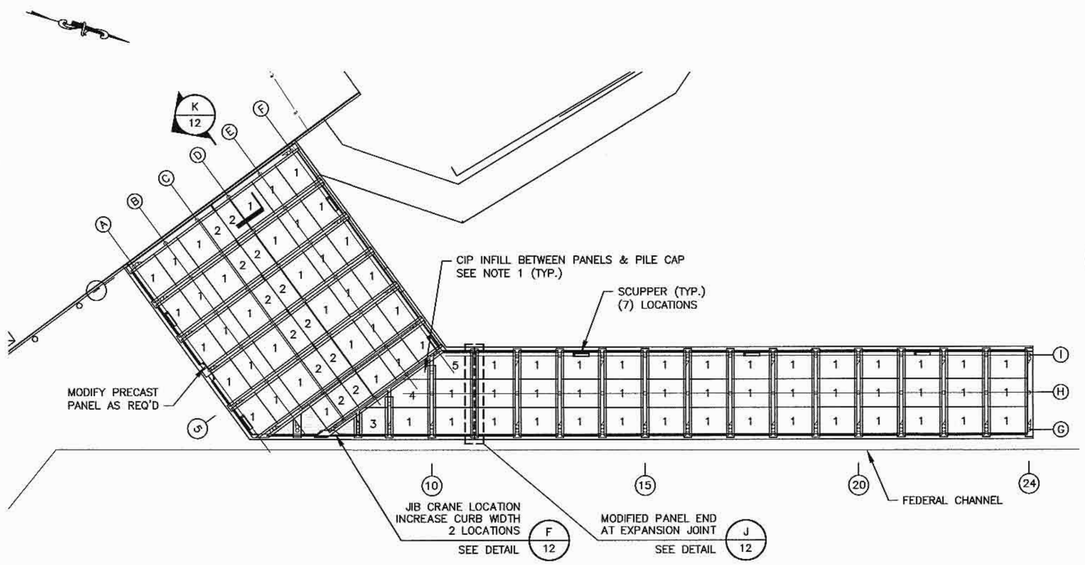

A 11 SOUTH PIER DECK PANEL LAYOUT

SCALE: 1"=20'-0"

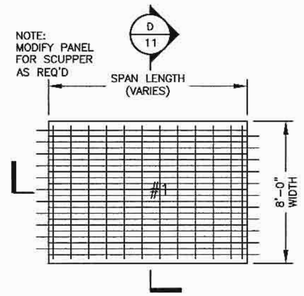

B 11 PRECAST DECK PLANK (TYP.)

SCALE: 1/4"=1'-0"

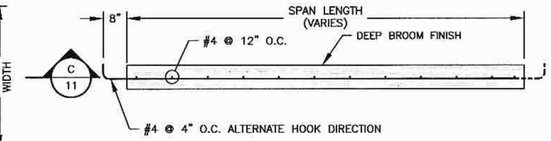

C 11 DECK PLANK – LONG SECTION

SCALE: 1/2"=1'-0"

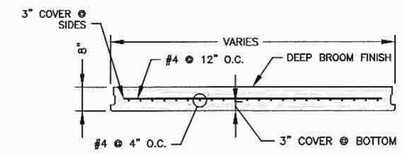

D 11 DECK PLANK– CROSS SECTION

SCALE: 1/2"=1'-0"

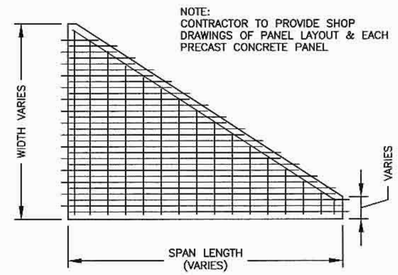

E 11 ANGLED DECK PANEL
PANEL #3,#4,#5

SCALE: 1/4"=1'-0"

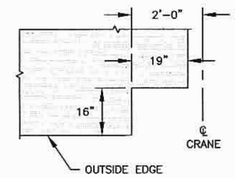

F 11 PANEL CUT OUT @ JIB CRANE

SCALE: 1/2"=1'-0"

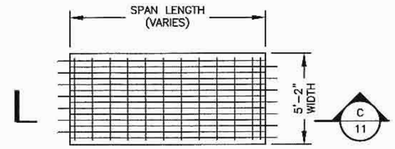

G 11 DECK PANEL #2

SCALE: 1/4"=1'-0"

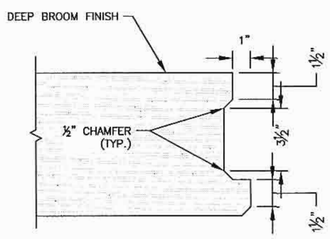

H 11 EDGE DETAIL

SCALE: 3"=1'-0"

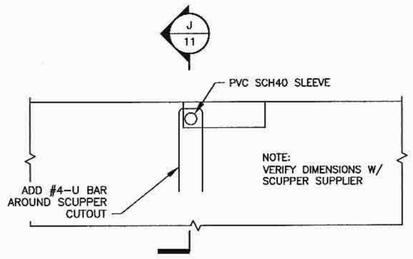

I 11 DRAINAGE SCUPPER DETAIL

SCALE: 1/4"=1'-0"

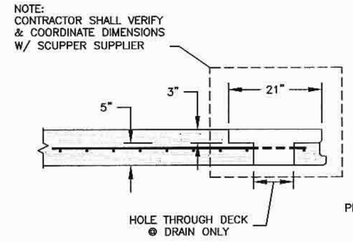

J 11 SECTION @ SCUPPER

SCALE: 3/4"=1'-0"

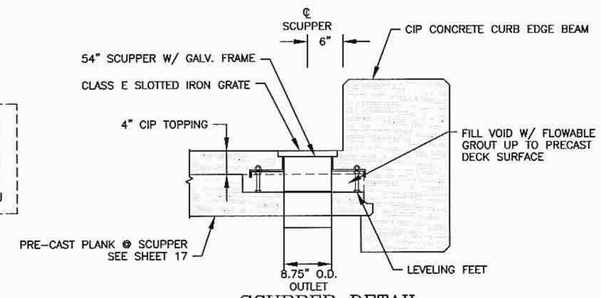

K 11 SCUPPER DETAIL

SCALE: 1"=1'-0"

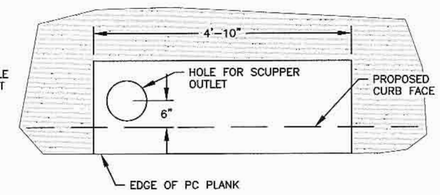

L 11 SCUPPER–PLAN

SCALE: 3/4"=1'-0"

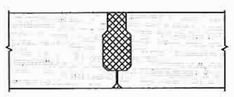

M 11 PRECAST SLAB INFILL

SCALE: 1-1/2"=1'-0"

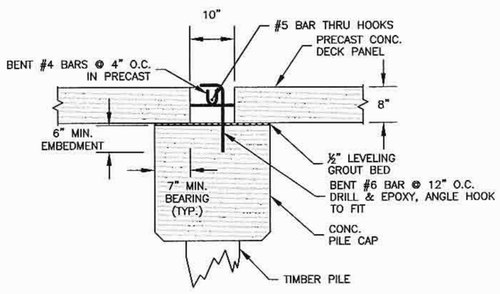

NOTE: CIP TOPPING NOT SHOWN

N 11 DECK PLANK/PILE CAP CONN.

SCALE: 3/4"=1'-0"

NOTES:
1. VOID AREAS TO BE FORMED & CAST IN PLACE AS REQ'D
2. PROVIDE GROUT BED FOR PRECAST DECK PANELS TO SIT WITH FULL BEARING ON PILE CAP.

R. J. Titmuss
12/11/15

PRECAST CONCRETE DECK LAYOUT & DETAILS

WHARF REPLACEMENT
PROJECT–PHASE I
TOWN OF PLYMOUTH
PLYMOUTH, MA
DECEMBER 2015

REVISIONS	

BCE Bourne Consulting Engineering, PC
3 Bent Street
Franklin, MA 02038
TEL. (508) 533-6666 FAX. (508) 533-0600

DRAWN: JSF
CHECKED: RJT
APPROVED: RJT
DATE: 12/07/15

DRAWING NO. 34032-01-11
SHEET 11 OF 27

File: X:\34946-\34032 PLYMOUTH T WHARF PHASE 1\FINAL DESIGN\BID #2\SHT-11 DECK PANEL LAYOUT PLAN.DWG - 11/12/2012 1:02 PM

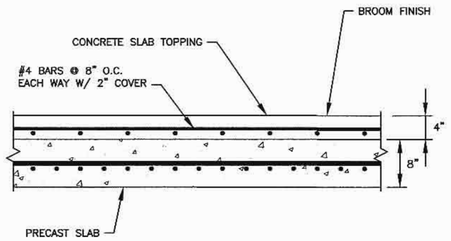

A/12 DECK REINFORCING DETAIL

SCALE: 1/2"=1'-0"

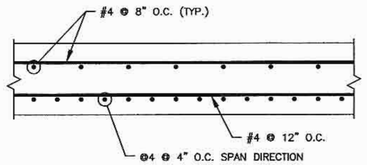

B/12 CIP DECK REINFORCING DETAIL

SCALE: 1/2"=1'-0"

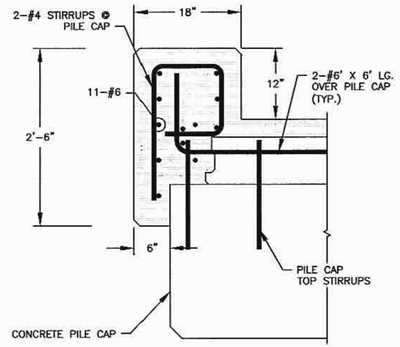

C/12 EDGE BEAM @ PILE CAP

SCALE: 1"=1'-0"

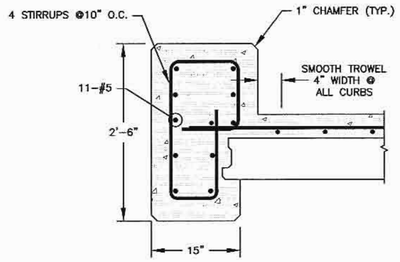

D/12 EDGE BEAM DETAIL-TYP

SCALE: 1"=1'-0"

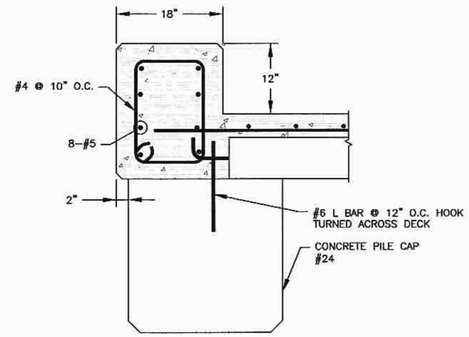

E/12 CURB DETAIL @ END

SCALE: 1"=1'-0"

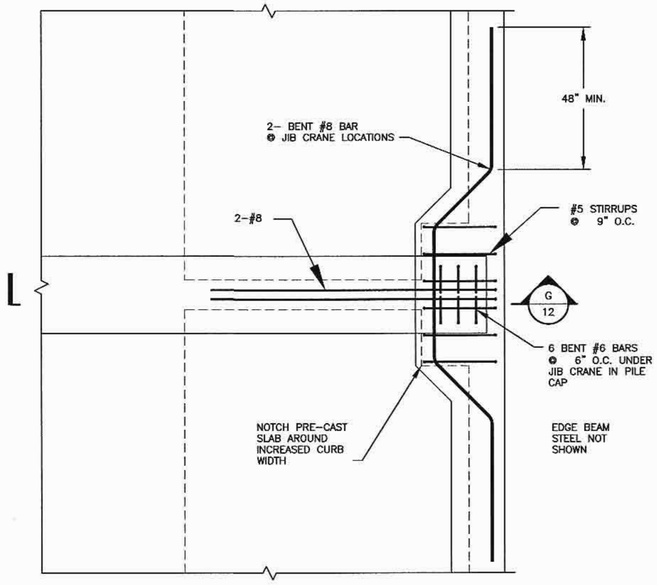

F/12 JIB CRANE FOUNDATION-PLAN

SCALE: 1/2"=1'-0"

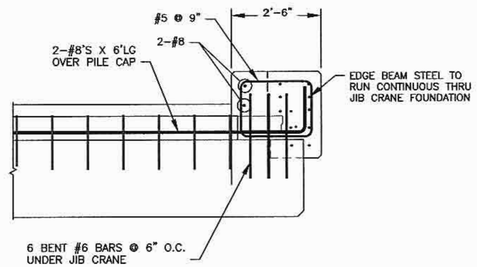

G/12 JIB CRANE FOUNDATION-SECTION

SCALE: 1/2"=1'-0"

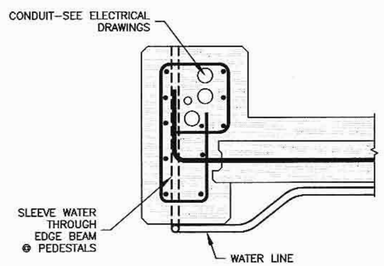

H/12 CONDUIT DETAIL

SCALE: 1"=1'-0"

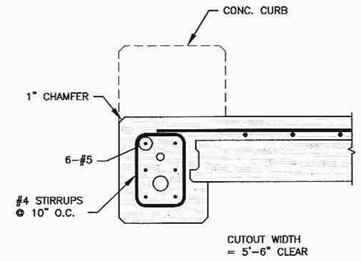

I/12 GANGWAY CUTOUT

SCALE: 1"=1'-0"

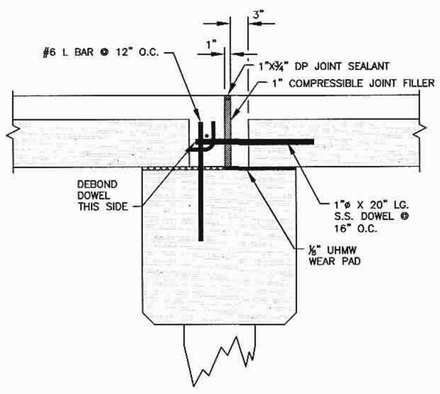

J/12 EXPANSION JOINT

SCALE: 1"=1'-0"

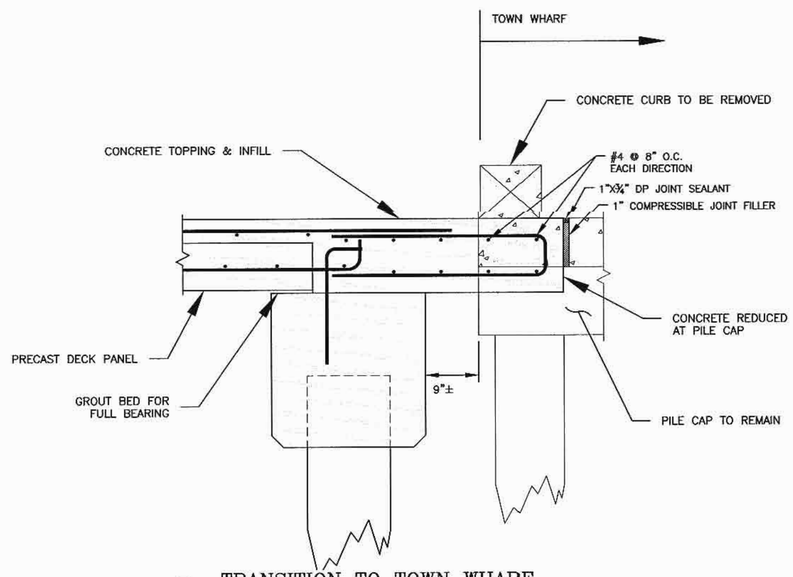

K/12 TRANSITION TO TOWN WHARF

SCALE: 1"=1'-0"

NOTES:
1. ALL EXPOSED CONCRETE SURFACES SHALL HAVE A 1" CHAMFER UNLESS NOTED OTHERWISE.
2. EDGE OF CIP CONCRETE TOPPING SHALL BE FINISHED W/ EDGING TROWEL.

DECK CONCRETE DETAILS

WHARF REPLACEMENT
PROJECT-PHASE I
TOWN OF PLYMOUTH
PLYMOUTH, MA
DECEMBER 2015

REVISIONS	

BCE Bourne Consulting Engineering, PC
3 Beat Street
Franklin, MA 02038
TEL. (508) 533-6666 FAX. (508) 533-0600

DRAWN: JSF
CHECKED: RJT
APPROVED: RJT
DATE: 12/07/15

DRAWING NO. 34032-01-12

SHEET 12 OF 27

File: X:\34946-\34032 PLYMOUTH T WHARF PHASE 1\FINAL DESIGN\BID #2\SHT-12 DECK CONC DETAILS.DWG - 11/12/2012 1:02 PM

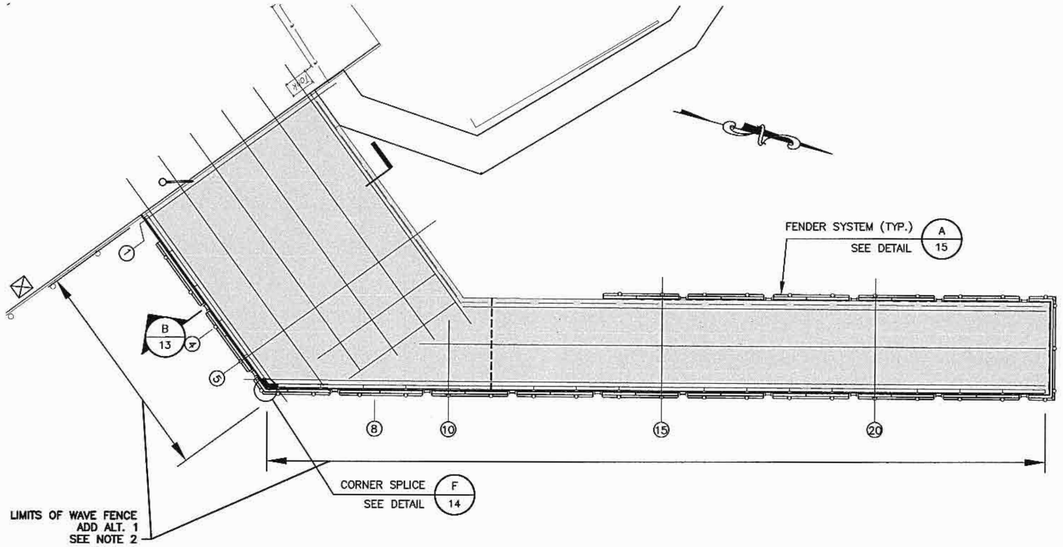

A 13 FENDER SYSTEM/WAVE FENCE

SCALE: 1"=20'-0"

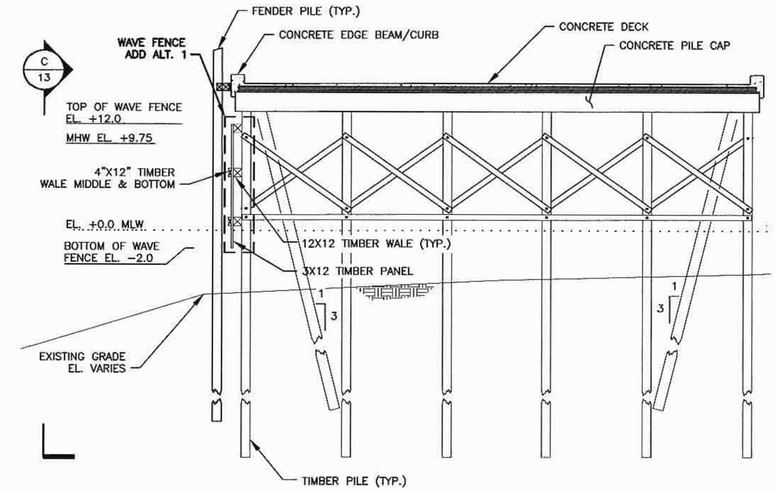

NOTE:
1. BASE BID INCLUDES FENDER SYSTEM, INCLUDING, BUT NOT LIMITED TO, ALL FENDER PILES, WALES, CHOCKS, ANCHORS, & FASTENERS.
2. ADD ALTERNATE #1 WAVE FENCE INCLUDES, BUT IS NOT LIMITED TO,
   - (3) 12X12 WALES
   - (3) 4X12 OUTER WALES
   - 3X12 TIMBER BOARDS ASSEMBLED INTO PANEL, FASTENERS AND LADDER ATTACHMENTS

B 13 FENDER SYSTEM/ WAVE FENCE - SECTION (TYP.)

SCALE: 1/8"=1'-0"

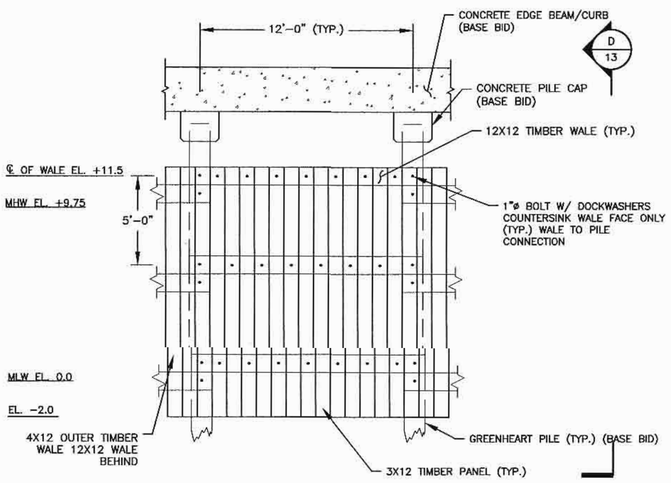

C 13 WAVE FENCE ELEVATION

SCALE: 1/4"=1'-0"

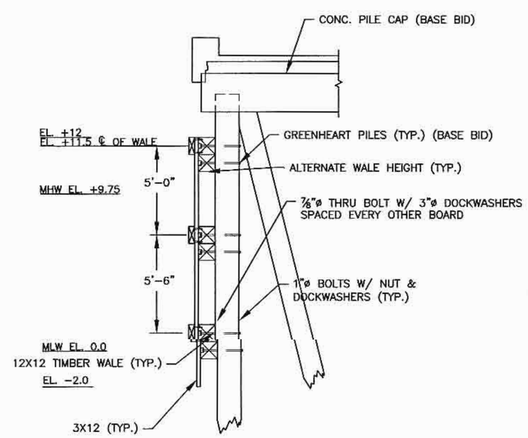

D 13 WAVE FENCE SECTION

SCALE: 1/4"=1'-0"

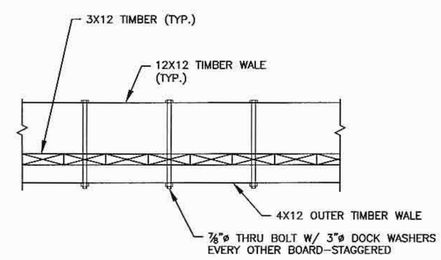

E 13 TIMBER PANEL - PLAN

SCALE: 3/4"=1'-0"

NOTE: FENDER SYSTEM (BASE BID) NOT SHOWN FOR CLARITY

WAVE FENCE
ADD ALTERNATE #1

COMMONWEALTH OF MASSACHUSETTS
RUSSELL J. TIBBITS
STRUCTURAL
No. 46514
REGISTERED PROFESSIONAL ENGINEER
R.J. Tibbits
12/11/15

FENDER SYSTEM/ WAVE FENCE-PLAN

WHARF REPLACEMENT
PROJECT-PHASE I
TOWN OF PLYMOUTH
PLYMOUTH, MA
DECEMBER 2015

REVISIONS

BCE Bourne Consulting Engineering, PC
3 Beal Street
Franklin, MA 02038
TEL. (508) 533-8666 FAX. (508) 533-0600

DRAWN: JSF
CHECKED: RJT
APPROVED: RJT
DATE: 12/07/15

DRAWING NO. 34032-01-13
SHEET 13 OF 27

File: X:\34946-\34032 PLYMOUTH T WHARF PHASE 1\FINAL DESIGN\BID #2\SHT-13 WAVE FENCE - PLAN, ELEVATIONS & SECTIONS.DWG - 11/12/2012 1:02 PM

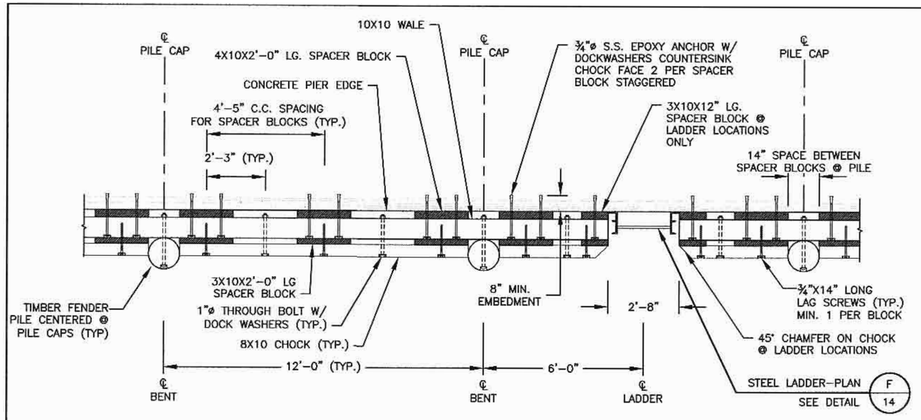

FENDER PLAN (TYP.)

A 14

SCALE: 3/8"=1'-0"

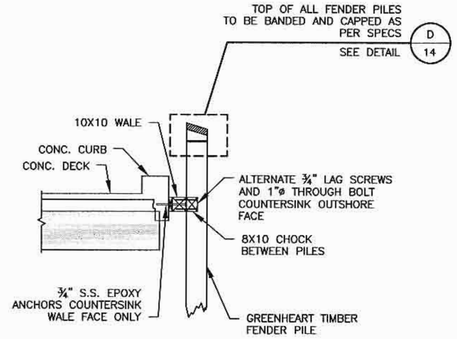

SECTION @ CHOCK

B 14

SCALE: 1/4"=1'-0"

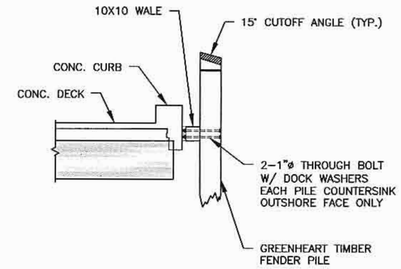

SECTION @ FENDER PILE

C 14

SCALE: 1/4"=1'-0"

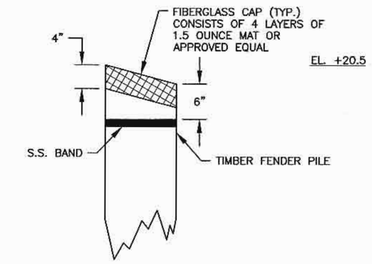

FENDER PILE CAPPING

D 14

SCALE: 1"=1'-0"

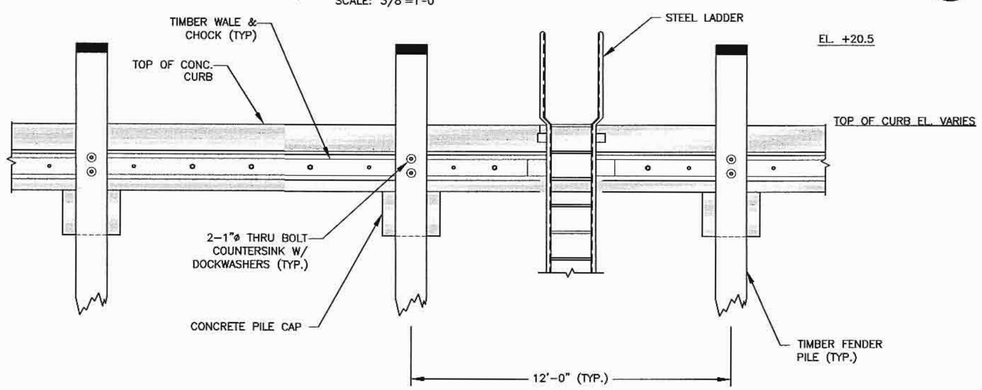

FENDER ELEVATION (TYP.)

D 14

SCALE: 3/8"=1'-0"

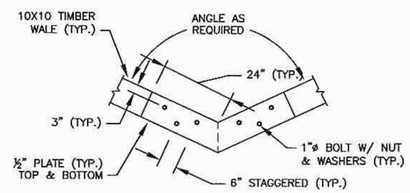

CORNER SPLICE DETAIL

E 14

SCALE: 1/2"=1'-0"

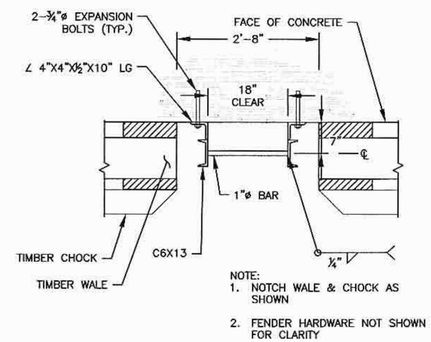

STEEL LADDER-PLAN

F 14

SCALE: 3/4"=1'-0"

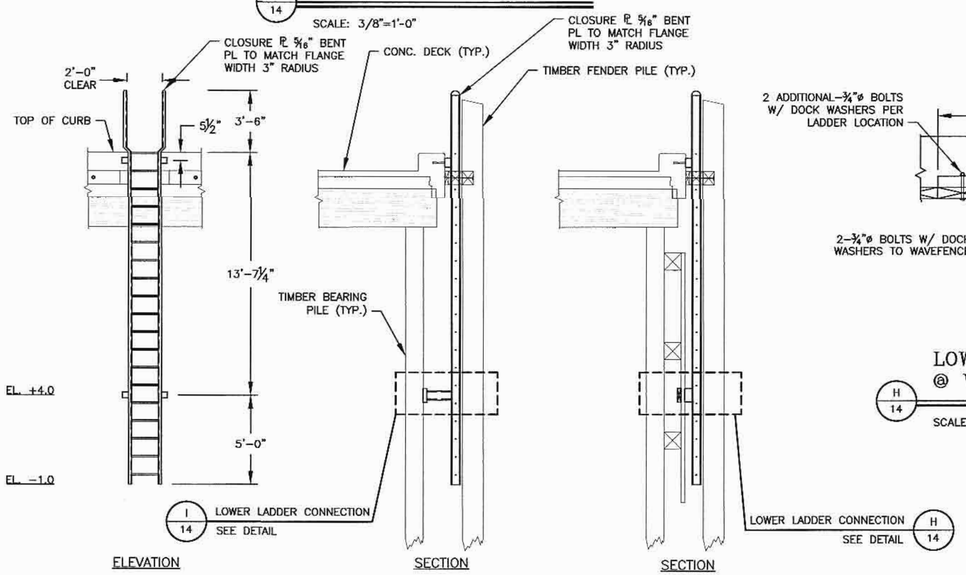

STEEL LADDER-ELEVATION & SECTIONS

G 14

SCALE: 1/4"=1'-0"

NOTE: SECTION APPLIES IF ADD ALT 1-WAVE FENCE INCLUDED IN CONTRACT

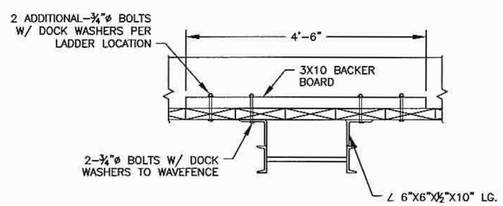

LOWER LADDER CONNECTION @ WAVEFENCE

H 14

SCALE: 3/4"=1'-0"

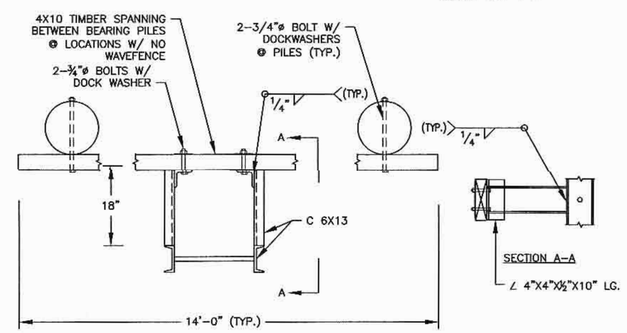

LOWER LADDER SUPPORT

I 14

SCALE: 3/4"=1'-0"

NOTE:
1. ALL TIMBER SHALL BE TREATED SYP NO. 2 U.N.O. FOR MARINE EXPOSURE.
2. ALL HARDWARE SHALL BE HOT DIP GALVANIZED.
3. ALL BOLTS SHALL BE ASTM A307 FOR TIMBER CONNECTIONS.
4. ALL BOLTS FASTENING TIMBER SHALL HAVE DOCK WASHERS UNLESS OTHERWISE NOTED.

TIMBER DETAILS

WHARF REPLACEMENT
PROJECT-PHASE I
TOWN OF PLYMOUTH
PLYMOUTH, MA
DECEMBER 2015

REVISIONS

BCE Bourne Consulting Engineering, PC
3 Bent Street
Franklin, MA 02038
TEL (508) 533-6666 FAX (508) 533-0600

DRAWN: JSF
CHECKED: RJT
APPROVED: RJT
DATE: 12/07/15

DRAWING NO. 34032-01-14

SHEET 14 OF 27

File: X:\34946-\34032 PLYMOUTH T WHARF PHASE 1\FINAL DESIGN\BID #2\SHT-14 WAVEFENCE DETAILS.DWG - 11/12/2012 1:02 PM

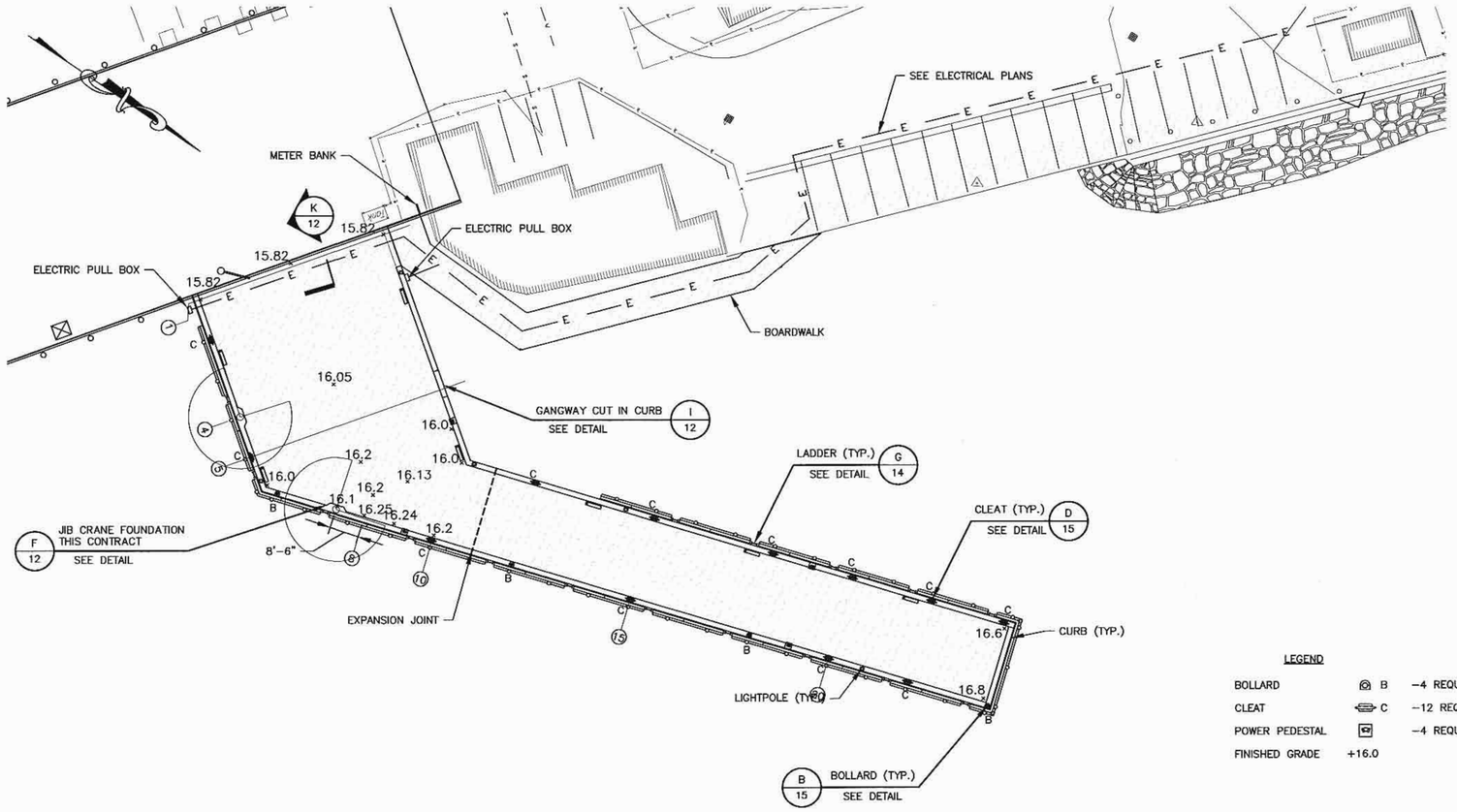

A 15 DECK LAYOUT PLAN

SCALE: 1"=20'-0"

LEGEND

BOLLARD	B	-4 REQUIRED
CLEAT	C	-12 REQUIRED
POWER PEDESTAL		-4 REQUIRED
FINISHED GRADE	+16.0	

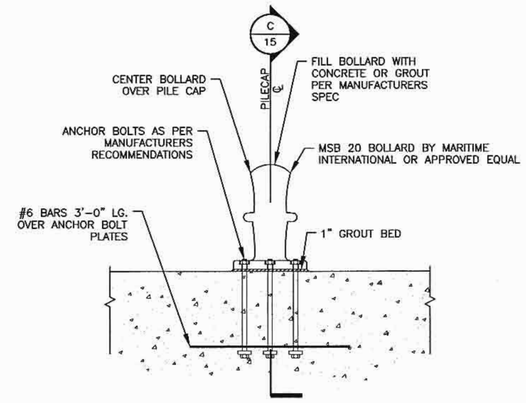

B 15 BOLLARD SECTION

SCALE: 3/4"=1'-0"

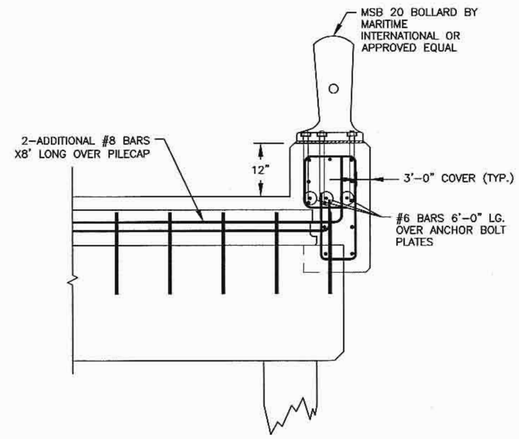

C 15 BOLLARD DETAIL

SCALE: 1/2"=1'-0"

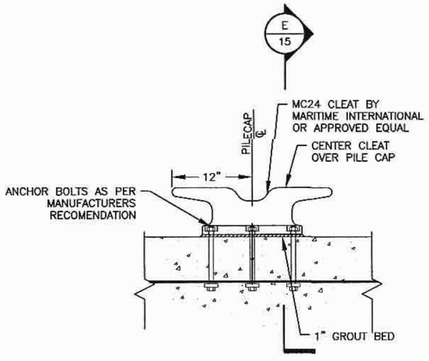

D 15 CLEAT SECTION

SCALE: N.T.S.

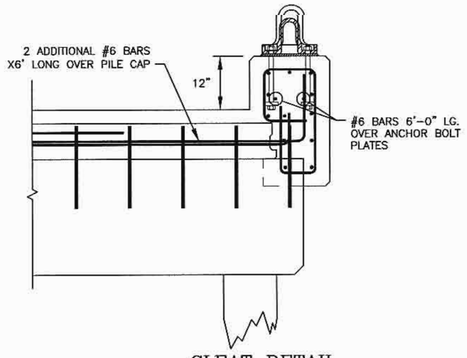

E 15 CLEAT DETAIL

SCALE: 1/2"=1'-0"

COMMONWEALTH OF MASSACHUSETTS
RUSSELL J. TITMUSS
STRUCTURAL
No. 46514
REGISTERED
PROFESSIONAL ENGINEER

R.J. Titmuss
12/11/15

0 20 40

SCALE: 1" = 20'-0"

DECK LAYOUT PLAN

WHARF REPLACEMENT
PROJECT-PHASE I
TOWN OF PLYMOUTH
PLYMOUTH, MA
DECEMBER 2015

REVISIONS

BCE Bourne Consulting Engineering, PC
3 Bent Street
Franklin, MA 02038
TEL. (508) 533-6666 FAX. (508) 533-0600

DRAWN: JSF
CHECKED: RJT
APPROVED: RJT
DATE: 12/07/15

DRAWING NO. 34032-01-15

SHEET 15 OF 27

File: X:\34946-\34032 PLYMOUTH T WHARF PHASE 1\FINAL DESIGN\BID #2\SHT-15 DECK FIXTURE LAYOUT.DWG - 11/12/2012 1:02 PM

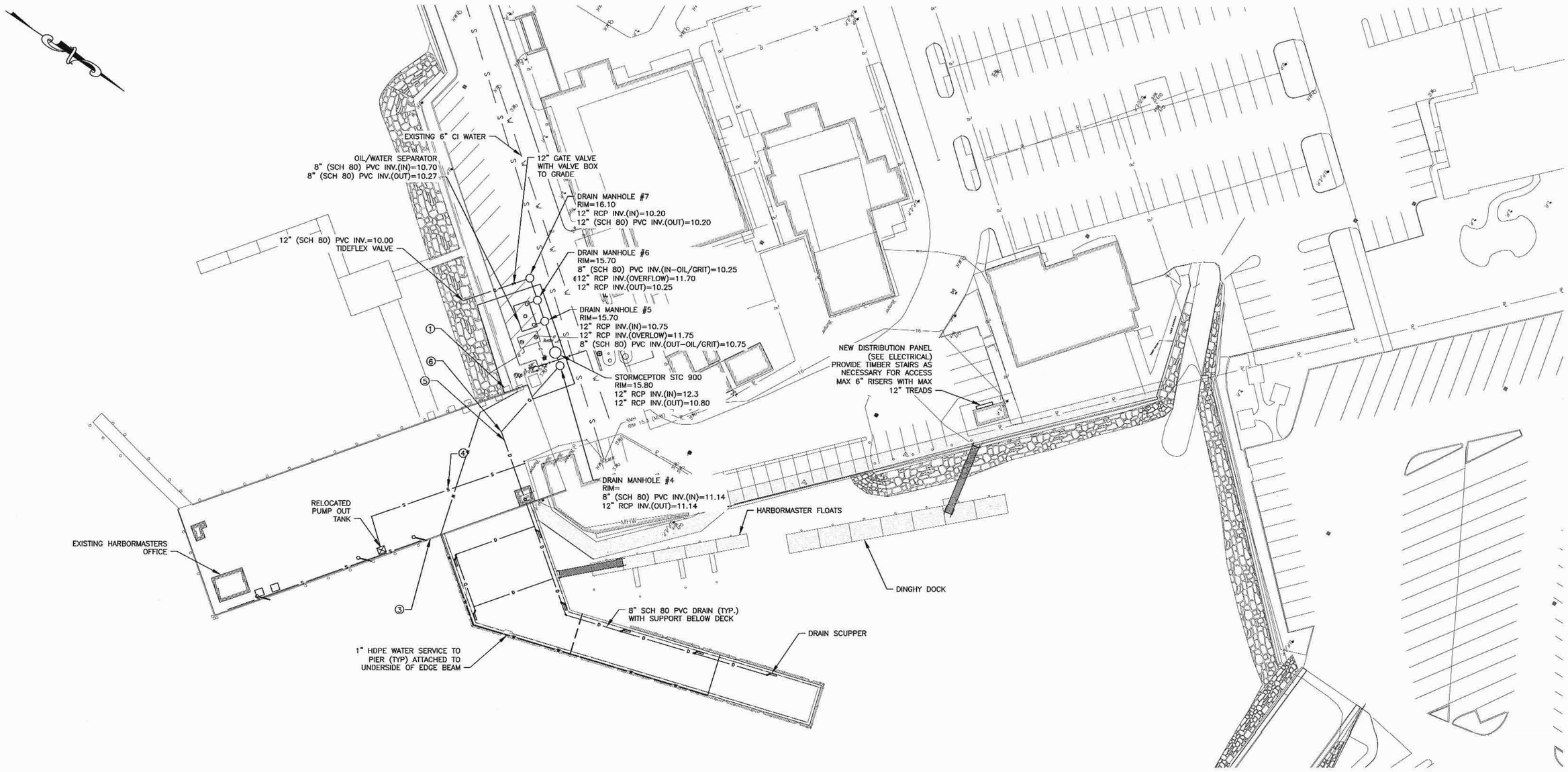

LEGEND:

1. CONTRACTOR SHALL FIELD VERIFY EXISTING GRADES FOR NEW STRUCTURE RIM ELEVATIONS.
2. EXISTING BACKFLOW PREVENTER WITH 1" WATER METER IN ENCLOSURE. CONNECT 1" HDPE SERVICE FOR SOUTH PIER AFTER BACKFLOW PREVENTOR BY CONNECTING INTO EXISTING COPPER TUBING WITH TEE ASSEMBLY WITH TWO BALL VALVES SO THAT EXISTING SERVICE AND PROPOSED SERVICE CAN BE ISOLATED.
3. A. RELOCATED PUMP VACUUM SYSTEM AND ENCLOSURE; MODIFY EXISTING 2" VACUUM PIPE AND DISCHARGE PIPING AS NECESSARY BASED ON NEW LOCATIONS. (BY OTHERS)
   B. ELECTRICAL SERVICE TO NEW PUMP VACUUM SYSTEM. (WORK OF THIS CONTRACT)
4. NEW 2" SDR-11 HDPE DISCHARGE PIPE; CONNECT TO EXISTING 2" DISCHARGE PIPING; CUT AND REMOVE ABANDONED PORTION OF PREVIOUSLY EXISTING DISCHARGE PIPING (TYP.) -BY OTHERS
5. PROVIDE NEW 3"X10" TIMBER UNDER EXISTING PIER AS REQUIRED FOR STORM WATER PIPE ATTACHMENT.
6. 8"X8" PVC WYE WITH THREADED CAP.

COMMONWEALTH OF MASSACHUSETTS
RUSSELL J. TITMUSS
STRUCTURAL
No. 48514
REGISTERED
PROFESSIONAL ENGINEER

R. J. Titmuss
12/11/15

PIER UTILITY PLAN

WHARF REPLACEMENT PROJECT-PHASE I

TOWN OF PLYMOUTH
PLYMOUTH, MA
DECEMBER 2015

0 30 60
SCALE: 1"=30'-0"

REVISIONS

BCE Bourne Consulting Engineering, PC
3 Bent Street
Franklin, MA 02038
TEL. (508) 533-6666 FAX. (508) 533-0600

DRAWN: JSF
CHECKED: RJT
APPROVED: RJT
DATE: 12/07/15

DRAWING NO. 34032-01-16
SHEET 16 OF 27

File: X:\34946-\34032 PLYMOUTH T WHARF PHASE 1\FINAL DESIGN\BID #2\SHT-16 PIER UTILITY PLAN.DWG - 11/12/2012 1:02 PM

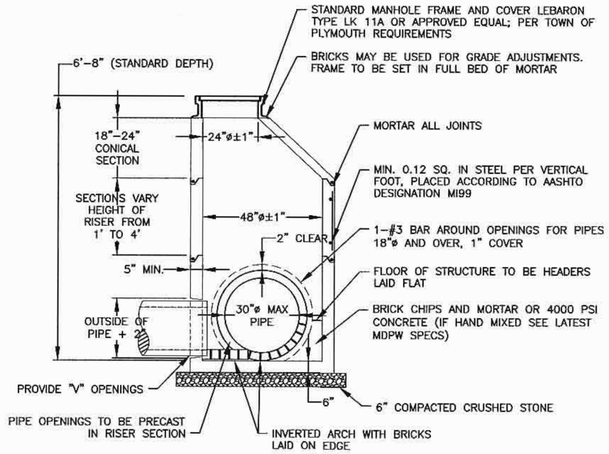

MANHOLE DETAIL

A / 17

SCALE: N.T.S.

NOTES:
1. MANHOLE DESIGN TO CONFORM TO ASTM C478 LATEST REVISION.
2. CONCRETE SHALL BE WET CAST 4000 P.S.I. @ 28 DAYS.
3. USE FLAT TOP SLAB WHEN HEIGHT OF CONE SECTION IS LESS THAN 3'-0"
4. FILL OUTSIDE FACE OF ALL MANHOLE JOINTS WITH NON-SHRINK MORTAR.

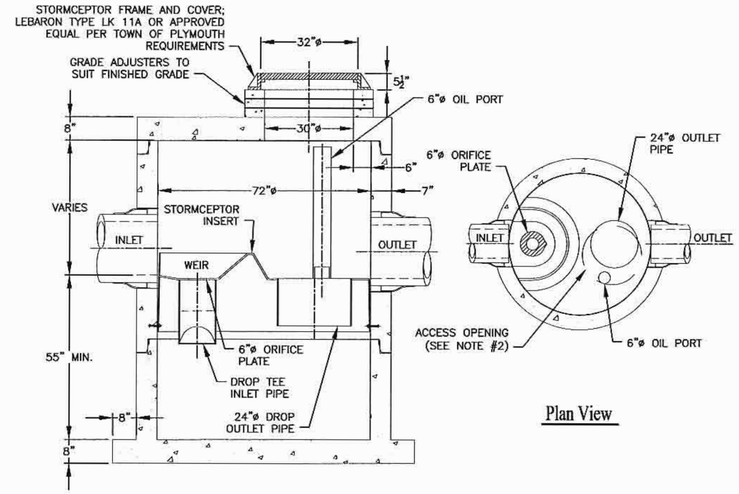

Section Thru Chamber

Plan View

STC 900 PRECAST STORMCEPTOR

B / 17

SCALE: 1/2"=1'-0"

NOTES:
1. THE USE OF FLEXIBLE CONNECTION IS RECOMMENDED AT THE INLET AND OUTLET WHERE APPLICABLE.
2. THE COVER SHOULD BE POSITIONED OVER THE OUTLET DROP PIPE AND THE OIL PORT.
3. THE STORMCEPTOR SYSTEM IS PROTECTED BY ONE OR MORE OF THE FOLLOWING U.S. PATENTS: #4985148, #5725760, #5753115, #5849181, #6068765, #6371690.
4. CONTACT A CONCRETE PIPE DIVISION REPRESENTATIVE FOR FURTHER DETAILS NOT LISTED ON THIS DRAWING.

DRAINAGE NOTES:
1. ALL CAST IN PLACE CONCRETE TO HAVE A MINIMUM 28 DAY STRENGTH OF 4000 LBS PER SQ. INCH, USING 3/4"MAXIMUM SIZE AGGREGATE.
2. REINFORCING STEEL BARS ARE DEFORMED BARS OF BILLET STEEL ASTM A615 GRADE 60.
3. WELDED WIRE FABRIC CONFORMS TO ASTM A185.
4. CAST IRON FRAME, TYPE "A" AND COVER TYPE "A" FOR DETAILS SEE BWSC DETAILS NOS. F1-D01, F1-D04 AND F1-D05. COVERS TO BE MARKED EITHER "SEWER" OR "DRAIN".
5. DESIGN LIVE LOAD - HS 20 - 44.
6. MINIMUM COVER FOR REINFORCING IN WALLS OR SLABS POURED AGAINST EARTH SHALL BE 3 INCHES. ALL OTHERS SHALL BE 2 INCHES UNLESS OTHERWISE NOTED.
7. ALL MANHOLES SHALL BE CONSTRUCTED OF REINFORCED CONCRETE. SHOP DRAWINGS SUBMITTALS SHALL SHOW ALL REINFORCING DETAILS.

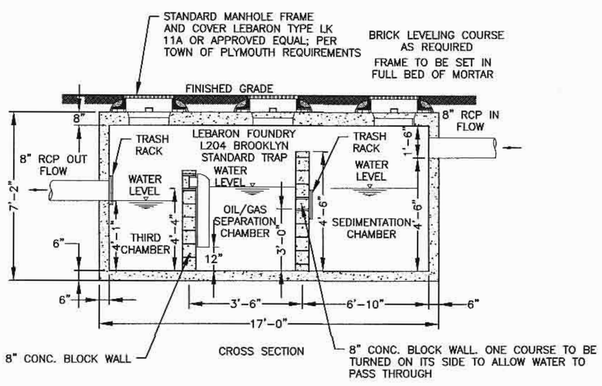

GRIT CHAMBER SPECIFICATIONS:
1. CONCRETE MINIMUM STRENGTH-5000 P.S.I. @ 28 DAYS
2. STEEL REINFORCEMENT-ASTM A-615-75. GRADE 60. 1" MIN. COVER
3. CONSTRUCTION JOINT-SEALED WITH 1"ø BUTYL RUBBER OR EQUIVALENT
4. OIL/WATER CHAMBER CAPACITY = 4,000 GALLONS (MINIMUM)
5. INSIDE WIDTH OF CHAMBER IS 10'-0"

OIL/WATER SEPARATOR

C / 17

SCALE: N.T.S.

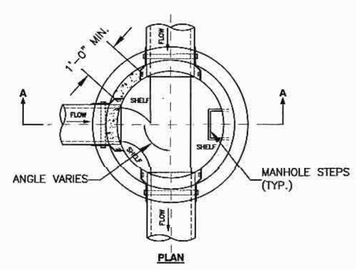

PLAN

INVERT DETAIL

D / 17

SCALE: 3/8"=1'-0"

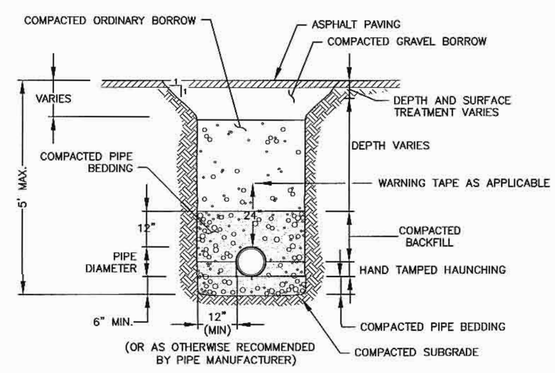

TRENCH DETAIL

E / 17

SCALE: N.T.S.

COMMONWEALTH OF MASSACHUSETTS
RUSSELL J. TITMUSS
STRUCTURAL
No. 46514
REGISTERED PROFESSIONAL ENGINEER

R. J. Titmuss
12/11/15

DRAINAGE DETAILS-1

WHARF REPLACEMENT
PROJECT-PHASE I
TOWN OF PLYMOUTH
PLYMOUTH, MA
DECEMBER 2015

BCE Bourne Consulting Engineering, PC
3 Beal Street
Franklin, MA 02038
TEL. (508) 533-6666 FAX. (508) 533-0600

DRAWN:	JSF
CHECKED:	RJT
APPROVED:	RJT
DATE:	12/07/15

REVISIONS

DRAWING NO. 34032-01-17

SHEET 17 OF 27

File: X:\34946-\34032 PLYMOUTH T WHARF PHASE 1\FINAL DESIGN\BID #2\SHT-17 DRAINAGE DETAILS-1.DWG - 11/12/2012 1:02 PM

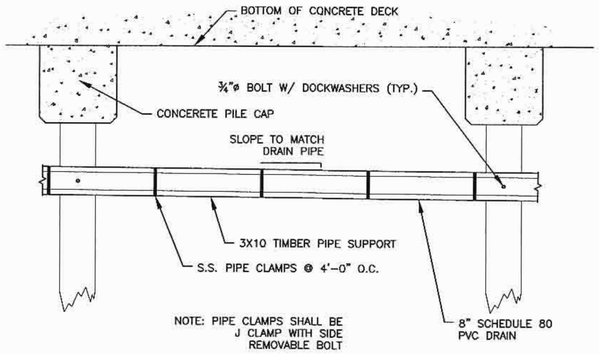

A/18 DRAIN PIPE SUPPORT

SCALE: 1/2"=1'-0"

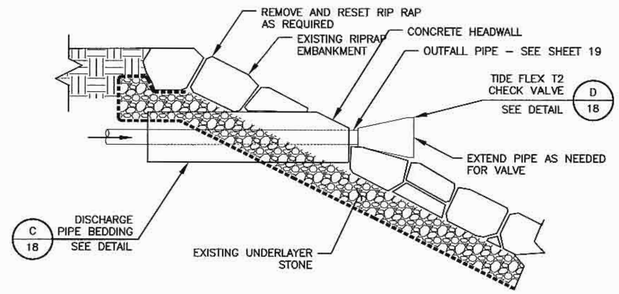

B/18 DRAINAGE DISCHARGE PIPE

SCALE: N.T.S.

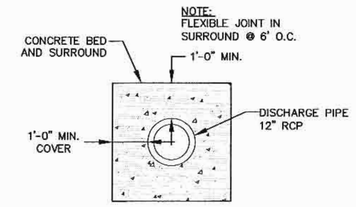

C/18 DISCHARGE PIPE BEDDING

SCALE: 1/2"=1'-0"

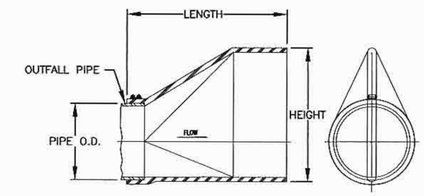

D/18 TIDE FLEX CHECK VALVE

SCALE: N.T.S

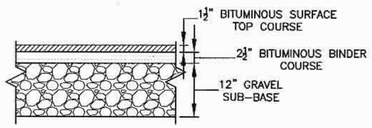

F/18 PAVEMENT DETAILS

SCALE: 3/4"=1'-0"

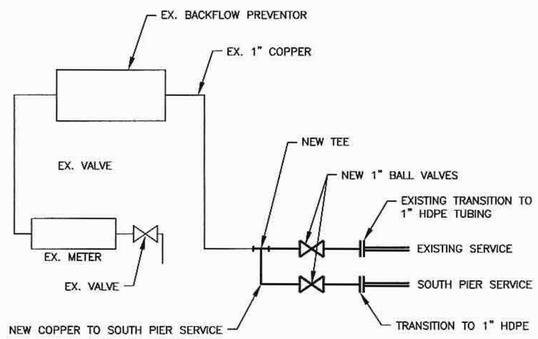

G/18 SOUTH PIER – WATER SERVICE SCHEMATIC DETAIL

SCALE: N.T.S.

COMMONWEALTH OF MASSACHUSETTS
RUSSELL J. TITMUSS
STRUCTURAL
No. 48514
REGISTERED PROFESSIONAL ENGINEER

R.J. Titmuss
12/11/15

DRAINAGE & WATER DETAILS–2

WHARF REPLACEMENT
PROJECT–PHASE I
TOWN OF PLYMOUTH
PLYMOUTH, MA
DECEMBER 2015

BCE Bourne Consulting Engineering, PC
3 Beal Street
Franklin, MA 02038
TEL. (508) 533-6666 FAX. (508) 533-0600

DRAWN: JSF
CHECKED: RJT
APPROVED: RJT
DATE: 12/07/15

REVISIONS

DRAWING NO. 34032-01-18

SHEET 18 OF 27

File: X:\34946-\34032 PLYMOUTH T WHARF PHASE 1\FINAL DESIGN\BID #2\SHT-18 DRAINAGE DETAILS-2.DWG - 11/12/2012 1:02 PM

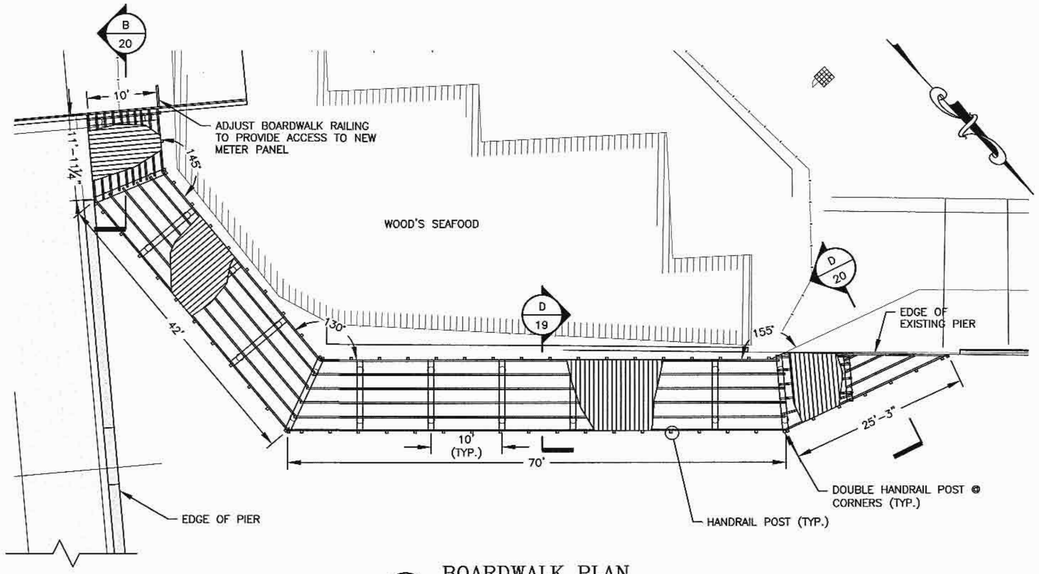

BOARDWALK PLAN

A 19

SCALE: 1"=10'-0"

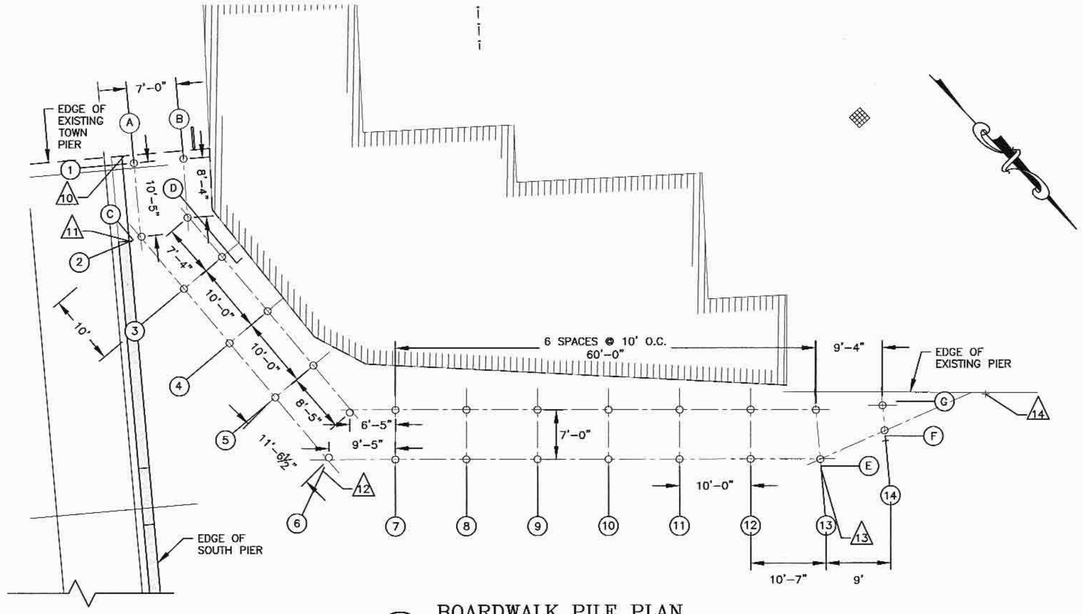

BOARDWALK PILE PLAN

B 19

SCALE: 1"=10'-0"

NOTE:
1. ALL BOARDWALK PILES SHALL BE CCA TREATED.
2. BOARDWALK PILES TO BE DRIVEN TO 10 TON SWL.
3. SLOPE BOARDWALK IF REQUIRED TO MATCH EXISTING GRADES. SLOPE SHALL NOT EXCEED 1:20.
4. SEE SHEET 8 FOR LAYING OUT COORDINATES

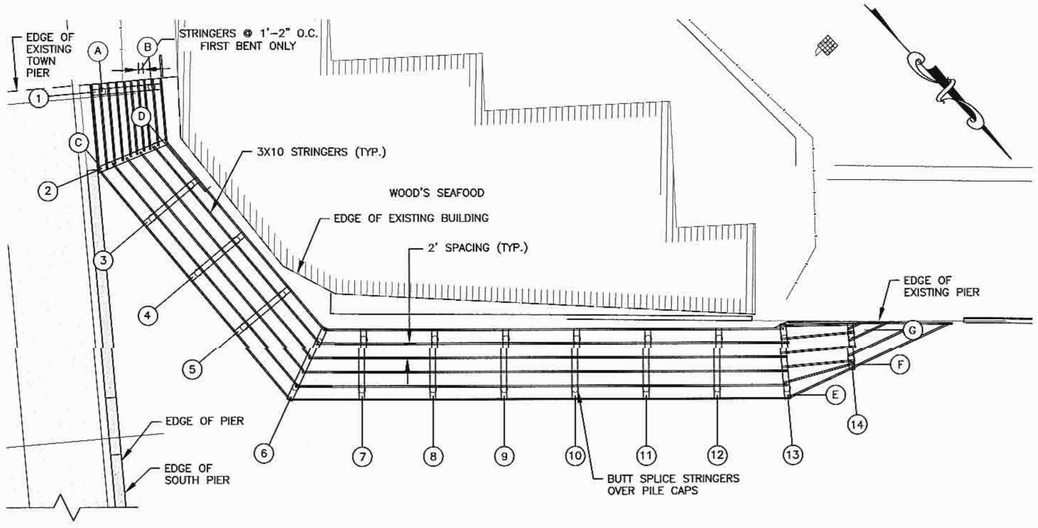

BOARDWALK PILE CAP & STRINGER PLAN

C 19

SCALE: 1"=10'-0"

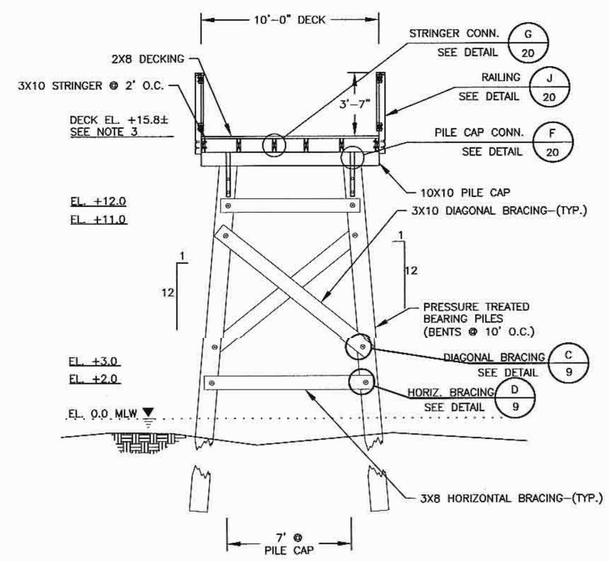

BOARDWALK SECTION (TYP.)

D 19

SCALE: 1/4"=1'-0"

R. J. Tobins
12/11/15

BOARDWALK PLAN & SECTIONS

WHARF REPLACEMENT PROJECT–PHASE I

TOWN OF PLYMOUTH

PLYMOUTH, MA

DECEMBER 2015

REVISIONS	

BCE Bourne Consulting Engineering, PC
3 Beal Street
Franklin, MA 02038
TEL. (508) 533-6666 FAX. (508) 533-0600

DRAWN:	JSF
CHECKED:	RJT
APPROVED:	RJT
DATE:	12/07/15

DRAWING NO. 34032-01-19

SHEET 19 OF 27

File: X:\34946-\34032 PLYMOUTH T WHARF PHASE 1\FINAL DESIGN\BID #2\SHT-19 BOARDWALK PLAN.DWG - 11/12/2012 1:02 PM

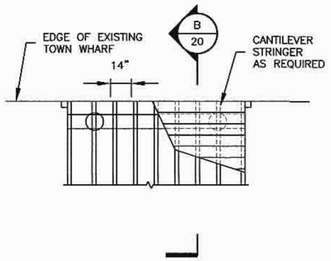

A/20 BOARDWALK SOUTH CONN.–PLAN

SCALE: 1/4"=1'-0"

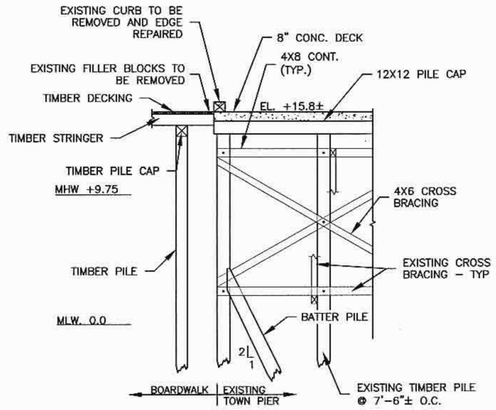

B/20 BOARDWALK SOUTH–SECTION

SCALE: 3/16"=1'-0"

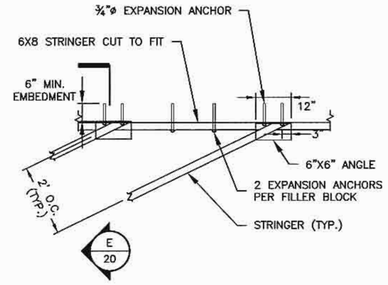

C/20 BOARDWALK NORTH CONN.–PLAN

SCALE: 1/2"=1'-0"

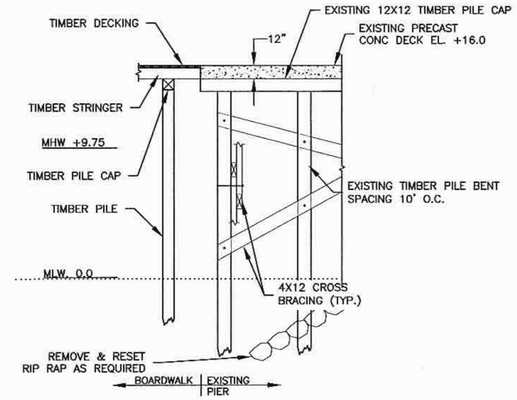

D/20 BOARDWALK NORTH–SECTION

SCALE: 3/16"=1'-0"

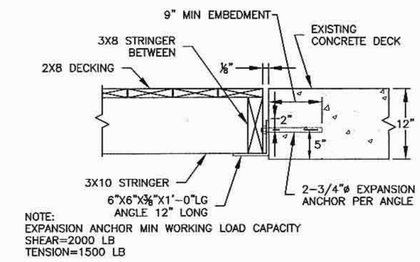

E/20 BOARDWALK TO PIER CONNECTION (NORTH)

SCALE: 1"=1'-0"

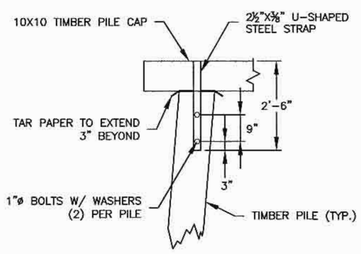

F/20 PILE CAP CONNECTION

SCALE: 1/2"=1'-0"

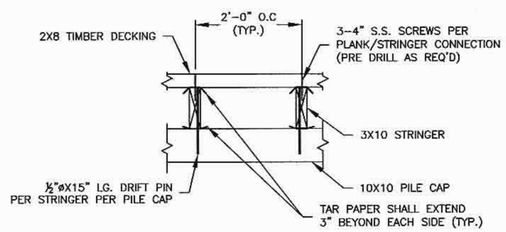

G/20 STRINGER/DECKING CONN.

SCALE: 3/4"=1'-0"

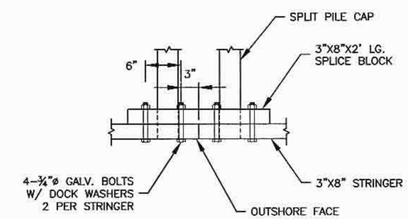

H/20 EDGE STRINGER SPLICE DETAIL

SCALE: 1"=1'-0"

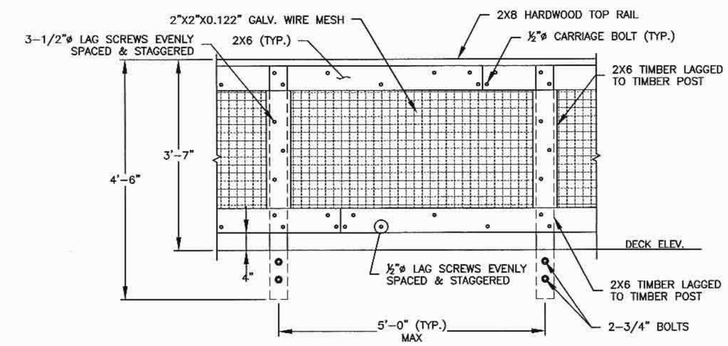

I/20 RAILING ELEVATION

SCALE: 3/4"=1'-0"

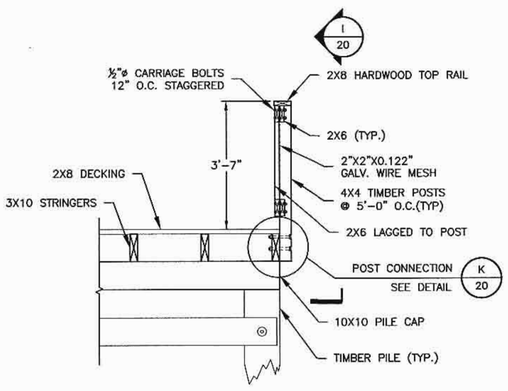

J/20 RAILING DETAIL

SCALE: 1/2"=1'-0"

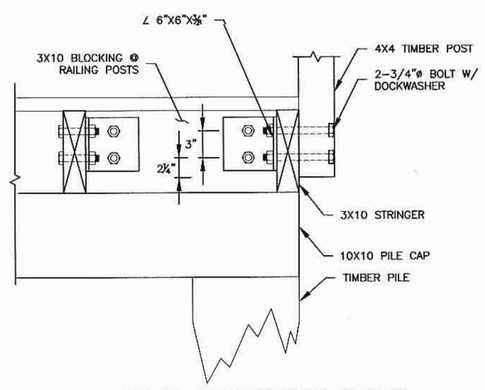

K/20 POST CONNECTION DETAIL

SCALE: 1/4"=1'-0"

COMMONWEALTH OF MASSACHUSETTS
RUSSELL J. TITMUSS
STRUCTURAL
No. 46514
REGISTERED PROFESSIONAL ENGINEER

R.J. Titmuss
12/11/15

BOARDWALK DETAILS

WHARF REPLACEMENT
PROJECT–PHASE I
TOWN OF PLYMOUTH
PLYMOUTH, MA
DECEMBER 2015

REVISIONS	

BCE Bourne Consulting Engineering, PC
3 Beal Street
Franklin, MA 02038
TEL. (508) 533-6666 FAX. (508) 533-0600

DRAWN: JSF
CHECKED: RJT
APPROVED: RJT
DATE: 12/07/15

DRAWING NO. 34032-01-20

SHEET 20 OF 27

File: X:\34946-\34032 PLYMOUTH T WHARF PHASE 1\FINAL DESIGN\BID #2\SHT-20 BOARDWALK DETAILS.DWG - 11/12/2012 1:02 PM