Site Plans

Proposed Cranberry Crescent Development

Plymouth, Massachusetts

(Assessors Map 105, Lot 1-27)

Site Plans Index

No.	Drawing Title	Latest Issue
C-1	Title & Index Sheet	1/20/2015
C-2	Legend & General Notes	1/20/2015
C-3	Overall Site Layout Plan	1/20/2015
C-4	Overall Site Grading & Drainage Plan	1/20/2015
C-5	Overall Site Utility Plan	1/20/2015
C-6	Erosion & Sedimentation Control Plan	1/20/2015
C-7	Lot 1 - Layout & Materials Plan	1/20/2015
C-8	Lot 1 - Grading & Drainage Plan	1/20/2015
C-9	Lot 1 - Utility Plan	1/20/2015
C-10	Lot 2 - Layout & Materials Plan	1/20/2015
C-11	Lot 2 - Grading & Drainage Plan	1/20/2015
C-12	Lot 2 - Utility Plan	1/20/2015
C-13	Lot 4 - Layout & Materials Plan	1/20/2015
C-14	Lot 4 - Grading & Drainage Plan	1/20/2015
C-15	Lot 4 - Utility Plan	1/20/2015
C-16	Lot 5 - Layout & Materials Plan	1/20/2015
C-17	Lot 5 - Grading & Drainage Plan	1/20/2015
C-18	Lot 5 - Utility Plan	1/20/2015
C-19	Sewer Plan & Profile 1	1/20/2015
C-20	Sewer Plan & Profile 2	1/20/2015
C-21	Sewer Plan & Profile 3	1/20/2015
C-22	Sewer Plan & Profile 4	1/20/2015
C-23	Sewer Plan & Profile 5	1/20/2015
C-24	General Site Construction Details	1/20/2015
C-25	General Site Construction Details	1/20/2015
C-26	General Site Construction Details	1/20/2015
C-27	General Site Construction Details	1/20/2015
C-28	General Site Construction Details	1/20/2015
C-29	General Site Construction Details	1/20/2015
C-30	General Site Construction Details	1/20/2015

Reference Plans Index

No.	Drawing Title	Latest Issue
L-1 - L-5	Landscaping Plan (R. Jon Henson Landscape Architects)	1/17/2014
1	ANR Plan (WSP Sells)	1/30/2013
LI-1	Lighting Plan (Buia Engineering)	10/10/2013
LI-2	Lighting Plan Details & Schedules (Buia Engineering)	10/10/2013
1-27	Architecturals & Signage Package (PCA, Inc.)	10/10/2013
G-1 - C-22	Force Main & Pump Station Plans (Tata & Howard)	1/19/2015

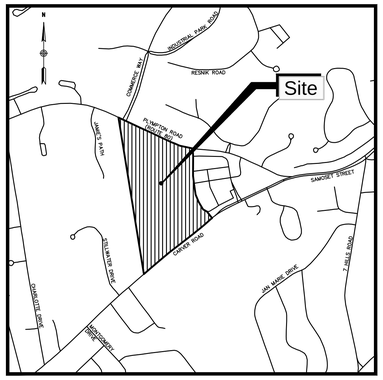

LOCUS PLAN

0 1,000 2,000

SCALE IN FEET

TABLE OF USES

ALLOWED USES PER ZBA SPECIAL PERMIT (CASE #2946)	PROPOSED USES
300,000 SF RETAIL	300,000 SF RETAIL
50,000 SF OFFICE	18,000 SF OFFICE
100 UNITS ELDERLY HOUSING	0 UNITS ELDERLY HOUSING
100 UNITS HOTELS	0 UNITS HOTELS

TEC, Inc.

65 Glenn Street
Lawrence, MA 01843
t: (978) 794-1792

169 Ocean Boulevard
Unit 101, PO Box 249
Hampton, NH 03842
t: (603) 601-8154

www.TheEngineeringCorp.com

DESIGNED BY	RJF
DRAWN BY	PFE
CHECKED BY	KRD
DATE	1/20/2015
SCALE	AS NOTED

PREPARED FOR

High Rock Cranberry Crescent, LLC
Suite 2-400
275 Grove Street
Newton, MA 02466

REVISIONS

ISSUED FOR

Construction

PROJECT TITLE

Cranberry Crescent Development

PROJECT LOCATION

Plymouth, Massachusetts

DRAWING TITLE

Title & Index Sheet

COMMONWEALTH OF MASSACHUSETTS
RICHARD J. FRIBERG JR.
CIVIL
No. 47850
REGISTERED PROFESSIONAL ENGINEER

1/20/15

PROJECT NO. T0372

TEC CAD FILE T0372_COV.dwg

DRAWING NO. C-1

SHEET 1 OF 30

GENERAL NOTES

1. CONTRACTOR SHALL NOTIFY DIG-SAFE (1-888-344-7233) AND THE LOCAL MUNICIPAL WATER & SEWER DEPT. AT LEAST 72 HOURS BEFORE EXCAVATING.
2. CONTRACTOR SHALL BE RESPONSIBLE FOR SITE SECURITY AND JOB SAFETY. CONSTRUCTION ACTIVITIES SHALL BE IN ACCORDANCE WITH OSHA STANDARDS AND LOCAL REQUIREMENTS. A 6-FOOT TEMPORARY CHAINLINK FENCE SHALL BE PROVIDED AROUND ALL CONSTRUCTION ACTIVITIES. CONTRACTOR SHALL LEAVE NO UNSECURED OPEN EXCAVATIONS.
3. HANDICAP ACCESSIBLE ROUTES, PARKING SPACES, RAMPS, SIDEWALKS AND WALKWAYS SHALL BE CONSTRUCTED IN CONFORMANCE WITH THE FEDERAL AMERICANS WITH DISABILITIES ACT/ARCHITECTURAL ACCESS BOARD (AAB), AND WITH STATE AND LOCAL LAWS AND REGULATIONS (WHICHEVER ARE MORE STRINGENT).
4. WITHIN THE LIMITS OF THE BUILDING FOOTPRINT, THE SITE CONTRACTOR SHALL PERFORM EARTHWORK OPERATIONS REQUIRED UP TO SUBGRADE ELEVATIONS.
5. WORK WITHIN THE LOCAL RIGHT-OF-WAY SHALL CONFORM TO LOCAL MUNICIPAL STANDARDS. WORK WITHIN STATE RIGHT-OF-WAY SHALL CONFORM TO THE LATEST EDITION OF THE STATE HIGHWAY DEPARTMENT STANDARD SPECIFICATION FOR HIGHWAYS AND BRIDGES.
6. UPON AWARD OF CONTRACT, THE CONTRACTOR SHALL MAKE NECESSARY CONSTRUCTION NOTIFICATIONS AND APPLY FOR AND OBTAIN NECESSARY PERMITS, PAY FEES, AND POST BONDS ASSOCIATED WITH THE WORK INDICATED ON THE DRAWINGS, IN THE SPECIFICATIONS, AND IN THE CONTRACT DOCUMENTS. DO NOT CLOSE OR OBSTRUCT ROADWAYS, SIDEWALK, OR FIRE HYDRANTS, WITHOUT APPROPRIATE PERMITS.
7. TRAFFIC SIGNAGE AND PAVEMENT MARKINGS SHALL CONFORM TO THE CURRENT EDITION OF THE MANUAL ON UNIFORM TRAFFIC CONTROL DEVICES.
8. AREAS OUTSIDE THE LIMITS OF PROPOSED WORK DISTURBED BY THE CONTRACTOR SHALL BE RESTORED TO THEIR ORIGINAL CONDITION AT NO ADDITIONAL COST TO THE OWNER.
9. IN THE EVENT THAT SUSPECTED CONTAMINATED SOIL, GROUNDWATER, OR OTHER MEDIA ARE ENCOUNTERED DURING EXCAVATION OR CONSTRUCTION ACTIVITIES, BASED ON VISUAL, OLFACTORY, OR OTHER EVIDENCE, THE CONTRACTOR SHALL STOP WORK IN THE VICINITY OF THE SUSPECT MATERIAL TO AVOID FURTHER SPREADING OF THE MATERIAL, AND SHALL NOTIFY THE OWNER IMMEDIATELY SO THAT THE APPROPRIATE TESTING AND SUBSEQUENT ACTION CAN BE TAKEN.
10. CONTRACTOR SHALL PREVENT DUST, SEDIMENT, AND DEBRIS FROM EXITING THE SITE AND SHALL BE RESPONSIBLE FOR CLEANUP, REPAIRS AND CORRECTIVE ACTION IF SUCH OCCURS.
11. CONTRACTOR SHALL CONTROL STORMWATER RUNOFF DURING CONSTRUCTION TO PREVENT ADVERSE IMPACTS TO OFF SITE AREAS, AND SHALL BE RESPONSIBLE TO REPAIR RESULTING DAMAGES, IF ANY, AT NO ADDITIONAL COST TO THE OWNER.

GRADING, DRAINAGE AND UTILITY NOTES

1. THE LOCATIONS, SIZES, AND TYPES OF EXISTING UNDERGROUND UTILITIES ARE SHOWN AS AN APPROXIMATE REPRESENTATION ONLY. THE OWNER OR ITS REPRESENTATIVE(S) HAVE NOT INDEPENDENTLY VERIFIED THIS INFORMATION AS SHOWN ON THE PLANS. THE UTILITY INFORMATION SHOWN DOES NOT GUARANTEE THE ACTUAL EXISTENCE, SERVICEABILITY, OR OTHER DATA CONCERNING THE UTILITIES, NOR DOES IT GUARANTEE AGAINST THE POSSIBILITY THAT ADDITIONAL UTILITIES MAY BE PRESENT THAT ARE NOT SHOWN ON THE PLANS. PRIOR TO ORDERING MATERIALS AND BEGINNING CONSTRUCTION THE CONTRACTOR SHALL VERIFY AND DETERMINE THE EXACT LOCATION, SIZES, AND ELEVATION OF EXISTING UTILITIES.
2. WHERE AN EXISTING UTILITY IS FOUND TO CONFLICT WITH THE PROPOSED WORK OR EXISTING CONDITIONS DIFFER FROM THOSE SHOWN SUCH THAT THE WORK CANNOT BE COMPLETED AS INTENDED, THE LOCATION, ELEVATION, AND SIZE OF THE UTILITY SHALL BE ACCURATELY DETERMINED WITHOUT DELAY BY THE CONTRACTOR, AND THE INFORMATION FURNISHED IN WRITING TO THE OWNER OR ITS REPRESENTATIVE(S) FOR THE RESOLUTION OF THE CONFLICT. FAILURE TO PROVIDE OR PERFORM THE ABOVE PRIOR TO PERFORMING ANY WORK SHALL NOT BE GROUNDS FOR EXTRA PAYMENTS TO THE CONTRACTOR.
3. AT ALL LOCATIONS WHERE EXISTING CURBING OR PAVEMENT ABUTS NEW CONSTRUCTION, THE EDGE OF THE EXISTING CURB OR PAVEMENT SHALL BE SAW CUT TO A CLEAN, SMOOTH EDGE. BLEND NEW PAVEMENT, CURBS, AND EARTHWORK SMOOTHLY INTO EXISTING BY MATCHING LINES, GRADES, AND JOINTS.
4. THE CONTRACTOR SHALL MAKE ALL ARRANGEMENTS FOR THE ALTERATION AND ADJUSTMENT OF GAS, ELECTRIC, TELEPHONE AND ANY OTHER PRIVATE UTILITIES BY THE UTILITY COMPANIES, AS REQUIRED.
5. ALL UTILITY COVERS, GRATES, ETC. SHALL BE ADJUSTED TO BE FLUSH WITH THE PAVEMENT FINISH GRADE UNLESS OTHERWISE NOTED.
6. INSTALL ALL UTILITIES, INCLUDING CONCRETE PADS, PER UTILITY COMPANY AND DPW STANDARDS.
7. EXISTING TREES AND SHRUBS OUTSIDE THE LIMITS OF GRADING SHALL BE REMOVED ONLY UPON PRIOR APPROVAL OF THE OWNER.
8. ALL SANITARY SEWER PIPE SHALL BE SDR-35 PVC UNLESS OTHERWISE NOTED.
9. WATER LINE SHALL BE CLASS 52 CEMENT LINED DUCTILE IRON.
10. INSULATE SANITARY PIPES WHERE INVERT DEPTH IS LESS THAN FIVE (5) FEET BELOW FINISHED GRADE.
11. CONTRACTOR SHALL PROTECT ALL UNDERGROUND DRAINAGE, SEWER AND UTILITY FACILITIES FROM EXCESSIVE VEHICULAR LOADS DURING CONSTRUCTION. ANY DAMAGE TO THESE FACILITIES RESULTING FROM CONSTRUCTION LOADS WILL BE RESTORED TO ORIGINAL CONDITION, AT NO ADDITIONAL COST TO THE OWNER, BY THE CONTRACTOR.
12. ALL WATER AND SEWER UTILITY WORK SHALL CONFORM TO LOCAL DPW, WATER DIVISION SPECIFICATIONS, DETAILS, RULES AND REGULATIONS AND HAVE FIVE (5) FEET OF MINIMUM COVER. GAS, ELECTRIC, AND TELEPHONE LOCATIONS AND ROUTING ARE SUBJECT TO REVIEW AND APPROVAL BY THE APPROPRIATE UTILITY COMPANIES.
13. FIRE ALARM CONNECTION LOCATIONS AND ROUTING ARE SUBJECT TO REVIEW AND APPROVAL BY THE FIRE DEPARTMENT.
14. CONTRACTOR SHALL REMOVE ALL EROSION CONTROL BARRIERS AFTER REVEGETATION OF DISTURBED AREAS AND AFTER APPROVAL BY THE LOCAL APPROVING AUTHORITY.
15. EXCAVATION REQUIRED IN THE PROXIMITY OF EXISTING UTILITY LINES SHALL BE DONE BY HAND. CONTRACTOR SHALL REPAIR ANY DAMAGE TO EXISTING UTILITY LINES OR STRUCTURES INCURRED DURING CONSTRUCTION OPERATIONS AT NO ADDITIONAL COST TO THE OWNER.
16. STOCKPILED TOPSOIL SHALL BE PLACED NEATLY IN AN AREA APPROVED BY THE OWNER/REPRESENTATIVE(S).
17. CONTRACTOR SHALL SCHEDULE THEIR WORK TO ALLOW THE FINISHED SUBGRADE ELEVATIONS TO DRAIN PROPERLY WITHOUT PUDDLING. SPECIFICALLY, ALLOW WATER TO ESCAPE WHERE PROPOSED CURB MAY RETAIN RUNOFF PRIOR TO APPLICATION OF THE FINISH SUBGRADE AND/OR SURFACE PAVING.
18. UNLESS OTHERWISE INDICATED, ABANDONED EXISTING UTILITY LINES SHALL BE CAPPED AND ABANDONED IN PLACE UNLESS THEY CONFLICT WITH PROPOSED IMPROVEMENTS, WHERE THEY SHALL THEN BE REMOVED. CAP REMAINING PORTIONS WHERE PARTIALLY REMOVED.
19. ALL GATES OPEN RIGHT. ALL VALVE SHAFT EXTENSIONS SHALL BE BUFFALO BOX TO CONFORM TO MUNICIPAL STANDARDS. AMERICAN DARLING OPEN LEFT HYDRANTS ARE TO BE USED. NO DOMESTIC WATER CAN BE TAPPED OFF FIRE SERVICE. ALL TOWN TIES NEED TO BE WET TAPS WITH RIGHT HANDED GATES. WATER LINES SHALL BE PRESSURE AND BACTERIA TESTED. THE TOWN SHALL BE PROVIDED WITH COPIES OF TEST RESULTS AND AS-BUILTS.
20. MINIMUM MANHOLE DIAMETER IS FOUR (4) FEET. CONTRACTOR SHALL VERIFY, THROUGH SHOP DRAWING SUBMITTALS TO THE ENGINEER, ACTUAL SIZES NEEDED TO ACCOMMODATE SPECIFIED PIPES.
21. LIGHTING CONDUIT IS NOT SHOWN AND SHALL BE DESIGNED BY THE LIGHTING CONTRACTOR.

PERMITTING NOTES:

1. APPROVAL NOT REQUIRED (ANR) PLAN PREPARED BY WSP SELLS DATED 1/30/2013 AND ENDORSED BY THE PLANNING BOARD.
2. LAYOUT OF COMMERCE WAY ON LOT 3 TO BE DETERMINED BY PERMANENT EASEMENT OR RIGHT-OF-WAY SUBSEQUENT TO ZBA SITE PLAN REVIEW. THIS ELIMINATES THE NEED FOR A DEFINITIVE SUBDIVISION.
3. OUTPARCEL BUILDINGS ON LOTS 2, 4, AND 5 ARE SHOWN WITH APPROXIMATE LAYOUTS. THE PROPONENT WILL COORDINATE FOR STAFF REVIEW OF MINOR TENANT-SPECIFIC MODIFICATIONS FOR RETAIL, RESTAURANT, OR OFFICE USES. THIS PLAN SET DEFINES ALL CURB CUTS, PARKING SUPPLY, AND PROPOSED UTILITY INFRASTRUCTURE.
4. PURSUANT TO CONDITION 13 OF THE RECORD SPECIAL PERMIT CASE 2946, THE ONE-ACRE "NEIGHBORHOOD GREEN" WILL BE LOCATED ON LOT 3.
5. OWNER SHALL CONSTRUCT AND MAINTAIN BOUNDARY FENCES AND BUFFER LANDSCAPING.
6. DRIVE-THRU FACILITIES PLANNED FOR LOTS 2 AND 4.
7. OWNERSHIP, MAINTENANCE, AND EASEMENTS ASSOCIATED WITH COMMERCE WAY, PUBLIC UTILITIES, AND STORMWATER FACILITIES SHALL CONFORM TO MEMORANDUM OF UNDERSTANDING W/ TOWN OF PLYMOUTH DATED 1/15/2013.

GENERAL SYMBOLS

EXISTING	PROPOSED	
		CATCH BASIN
		DRAIN MANHOLE
		FLARED END SECTION
		SEWER MANHOLE
		ELECTRIC MANHOLE
		TELEPHONE MANHOLE
		MANHOLE
HH	HH	HANDHOLE
B		BOLLARD
WG		WATER GATE
		FIRE HYDRANT
GG		GAS GATE
		POST-MOUNTED SIGN
		LIGHT POLE
		WALL MOUNTED LIGHT
		CART CORRAL
		UTILITY POLE
		GUY POLE
		GUY WIRE
		MONITORING WELL
	EOP	EDGE OF PAVEMENT
MCC	MCC	MONOLITHIC CONCRETE CURB
GC	VGC	GRANITE CURB (TYPE VA 4)
GE	GE	GRANITE EDGING
BB	BB	BITUMINOUS BERM
		GUARD RAIL
X	X	CHAINLINK FENCE
D		DRAINAGE LINE
S	S	SEWER LINE
W	W	WATER LINE
G	G	GAS LINE
E	E	UNDERGROUND ELECTRIC LINE
T	T	UNDERGROUND TELEPHONE LINE
		ELEC., TELE., CATV, IRRIGATION PIPE CONDUIT
OHW	OHW	OVERHEAD WIRE
		STONE WALL
		TREE LINE
		ENTRANCE/EXIT DOOR
PC 10 N00° 00' 00"E +57.59	PC 10 N00° 00' 00"E +57.59	BASELINE
N00° 00' 00"E	N00° 00' 00"E	TOWN LAYOUT
N00° 00' 00"E	N00° 00' 00"E	PROPERTY LINE
STONE BOUND	BND	HIGHWAY/PROPERTY BOUND (TYPE NOTED)
		WHEELCHAIR RAMP
		TREE (SIZE AND TYPE NOTED)
		HEAVY DUTY PAVEMENT SECTION
		CEMENT CONCRETE SURFACE
		ADA-ACCESSIBLE RAMP
		TRANSFORMER PAD

ABBREVIATIONS

GENERAL

ABAN	ABANDON
AC	ACRES
ADJ	ADJUST
APPROX	APPROXIMATE
BLDG	BUILDING
BO	BY OTHERS
BOS	BOTTOM OF SLOPE
CC	CONCRETE CURB
CEM	CEMENT
CLF	CHAIN LINK FENCE
CONC	CONCRETE
DIA	DIAMETER
ELEV	ELEVATION
EXIST	EXISTING
FND	FOUNDATION
GC	GRANITE CURB
GE	GRANITE EDGING
HMA	HOT MIX ASPHALT
LA	LANDSCAPE AREA
LF	LINEAR FEET
MAX	MAXIMUM
MCC	MONOLITHIC CONCRETE CURB
MIN	MINIMUM
NTS	NOT TO SCALE
PCC	PRECAST CONCRETE CURB
PROP	PROPOSED
PVMT	PAVEMENT
R	RADIUS
REM	REMOVE
REMOD	REMODEL
RET	RETAIN
R&R	REMOVE AND RESET
R&S	REMOVE AND STACK
SGE	SLOPED GRANITE EDGING
SW	SIDEWALK
TOS	TOP OF SLOPE
TYP	TYPICAL
UON	UNLESS OTHERWISE NOTED
WCR	WHEELCHAIR RAMP

UTILITIES

ACCMP	ASPHALT COATED CORRUGATED METAL PIPE
BC	BOTTOM OF CHANNEL
CB	CATCH BASIN
CAP	CORRUGATED ALUMINUM PIPE
CIP	CAST IRON PIPE
CIT	CHANGE IN TYPE
CLDI	CEMENT LINED DUCTILE IRON
COND	CONDUIT
DCB	DOUBLE CATCH BASIN
DIP	DUCTILE IRON PIPE
DMH	DRAINAGE MANHOLE
ETC	ELECTRIC, TELEPHONE, & CABLE
F&G	FRAME AND GRATE
F&C	FRAME AND COVER
GV	GAS VALVE
HDPE	HIGH DENSITY POLYETHYLENE PIPE
HYD	HYDRANT
INV	INVERT ELEVATION
PVC	POLYVINYL CHLORIDE PIPE
PWW	PAVED WATER WAY
RCP	REINFORCED CONCRETE PIPE (CLASS III)
SMH	SEWER MANHOLE
TSV	TAPPING SLEEVE AND VALVE
UP	UTILITY POLE
VCP	VITRIFIED CLAY PIPE
WV	WATER VALVE

ALIGNMENT/GRADING

CC	CENTER OF CURVE
PC	POINT OF CURVE
PCC	POINT OF COMPOUND CURVE
PI	POINT OF INTERSECTION
PNT	POINT
PRC	POINT OF REVERSE CURVE
PT	POINT OF TANGENT

PAVEMENT MARKINGS AND SIGNING SYMBOLS

EXISTING	PROPOSED	
CW	CW	CROSSWALK, 12" WHITE LINE (WIDTH NOTED)
SL	SL	STOP LINE, 12" WHITE LINE 4' BEHIND CW (TYP.)
SWEL,SWLL	SWEL,SWLL	SOLID WHITE LINE-4"
SYEL, SYLL	SYEL, SYLL	SOLID YELLOW LINE-4"
DYCL	DYCL	DOUBLE YELLOW CENTER LINE- 2-4" LINES
		PAVEMENT ARROW - WHITE
ONLY	ONLY	LEGEND "ONLY" - WHITE
		ADA-ACCESSIBLE PARKING SPACE
		SHARED LANE WHITE MARKING (SEE DETAIL IN COMMERCE WAY ROADWAY PLANS)
		BIKE LANE/SHOULDER WHITE MARKING (SEE DETAIL IN COMMERCE WAY ROADWAY PLANS)
		BIKE DETECTOR WHITE MARKING (SEE DETAIL IN COMMERCE WAY ROADWAY PLANS)

TEC, Inc.

65 Glenn Street
Lawrence, MA 01843
t: (978) 794-1792

169 Ocean Boulevard
Unit 101, PO Box 249
Hampton, NH 03842
t: (603) 601-8154

www.TheEngineeringCorp.com

DESIGNED BY	RJF
DRAWN BY	PFE
CHECKED BY	KRD
DATE	1/20/2015
SCALE	AS NOTED

PREPARED FOR

High Rock Cranberry Crescent, LLC
Suite 2-400
275 Grove Street
Newton, MA 02466

REVISIONS

ISSUED FOR

Construction

PROJECT TITLE

Cranberry Crescent Development

PROJECT LOCATION

Plymouth, Massachusetts

DRAWING TITLE

Title & Index Sheet

COMMONWEALTH OF MASSACHUSETTS
RICHARD J. FRIBERG JR.
CIVIL
No. 47850
REGISTERED PROFESSIONAL ENGINEER
1/20/15

PROJECT NO. T0372

TEC CAD FILE T0372_LEG.dwg

DRAWING NO. C-2

SHEET 2 OF 30

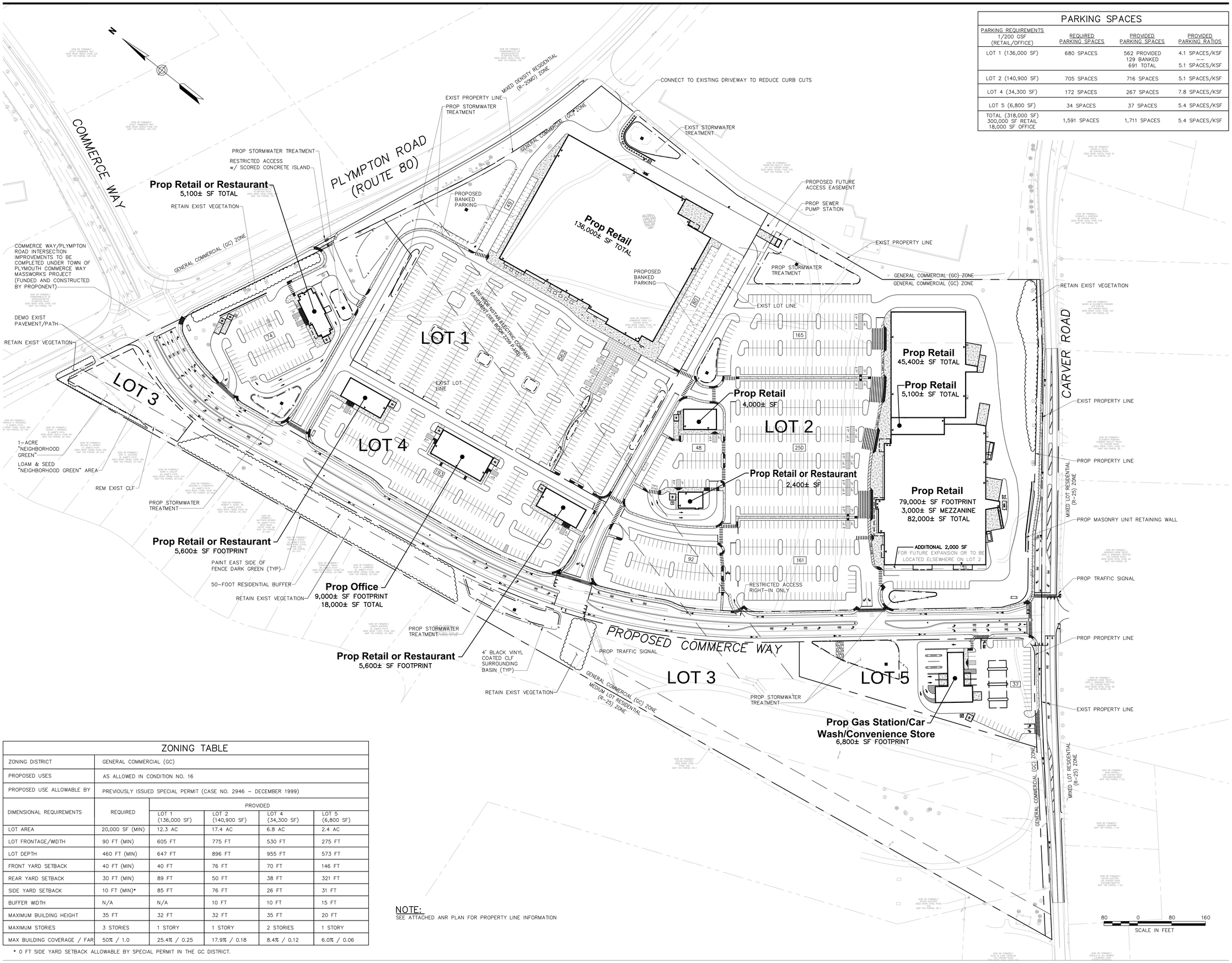

PARKING SPACES			
PARKING REQUIREMENTS 1/200 GSF (RETAIL/OFFICE)	REQUIRED PARKING SPACES	PROVIDED PARKING SPACES	PROVIDED PARKING RATIOS
LOT 1 (136,000 SF)	680 SPACES	562 PROVIDED 129 BANKED 691 TOTAL	4.1 SPACES/KSF — 5.1 SPACES/KSF
LOT 2 (140,900 SF)	705 SPACES	716 SPACES	5.1 SPACES/KSF
LOT 4 (34,300 SF)	172 SPACES	267 SPACES	7.8 SPACES/KSF
LOT 5 (6,800 SF)	34 SPACES	37 SPACES	5.4 SPACES/KSF
TOTAL (318,000 SF) 300,000 SF RETAIL 18,000 SF OFFICE	1,591 SPACES	1,711 SPACES	5.4 SPACES/KSF

ZONING TABLE					
ZONING DISTRICT	GENERAL COMMERCIAL (GC)				
PROPOSED USES	AS ALLOWED IN CONDITION NO. 16				
PROPOSED USE ALLOWABLE BY	PREVIOUSLY ISSUED SPECIAL PERMIT (CASE NO. 2946 – DECEMBER 1999)				
DIMENSIONAL REQUIREMENTS	REQUIRED	PROVIDED			
		LOT 1 (136,000 SF)	LOT 2 (140,900 SF)	LOT 4 (34,300 SF)	LOT 5 (6,800 SF)
LOT AREA	20,000 SF (MIN)	12.3 AC	17.4 AC	6.8 AC	2.4 AC
LOT FRONTAGE/WIDTH	90 FT (MIN)	605 FT	775 FT	530 FT	275 FT
LOT DEPTH	460 FT (MIN)	647 FT	896 FT	955 FT	573 FT
FRONT YARD SETBACK	40 FT (MIN)	40 FT	76 FT	70 FT	146 FT
REAR YARD SETBACK	30 FT (MIN)	89 FT	50 FT	38 FT	321 FT
SIDE YARD SETBACK	10 FT (MIN)*	85 FT	76 FT	26 FT	31 FT
BUFFER WIDTH	N/A	N/A	10 FT	10 FT	15 FT
MAXIMUM BUILDING HEIGHT	35 FT	32 FT	32 FT	35 FT	20 FT
MAXIMUM STORIES	3 STORIES	1 STORY	1 STORY	2 STORIES	1 STORY
MAX BUILDING COVERAGE / FAR	50% / 1.0	25.4% / 0.25	17.9% / 0.18	8.4% / 0.12	6.0% / 0.06

* 0 FT SIDE YARD SETBACK ALLOWABLE BY SPECIAL PERMIT IN THE GC DISTRICT.

NOTE:
SEE ATTACHED ANR PLAN FOR PROPERTY LINE INFORMATION

TEC

TEC, Inc.

65 Glenn Street
Lawrence, MA 01843
t: (978) 794-1792

169 Ocean Boulevard
Unit 101, PO Box 249
Hampton, NH 03842
t: (603) 601-8154

www.TheEngineeringCorp.com

DESIGNED BY	RJF
DRAWN BY	PFE
CHECKED BY	KRD
DATE	1/20/2015
SCALE	1"=80'

PREPARED FOR

High Rock Cranberry Crescent, LLC
Suite 2-400
275 Grove Street
Newton, MA 02466

REVISIONS

ISSUED FOR

Construction

PROJECT TITLE

Cranberry Crescent Development

PROJECT LOCATION

Plymouth, Massachusetts

DRAWING TITLE

Overall Site Layout Plan

COMMONWEALTH OF MASSACHUSETTS
RICHARD J. FRIBERG JR.
CIVIL
No. 47850
REGISTERED PROFESSIONAL ENGINEER
1/20/15

PROJECT NO. T0372

TEC CAD FILE T0372_SITE.dwg

DRAWING NO. C-3

SHEET 3 OF 30

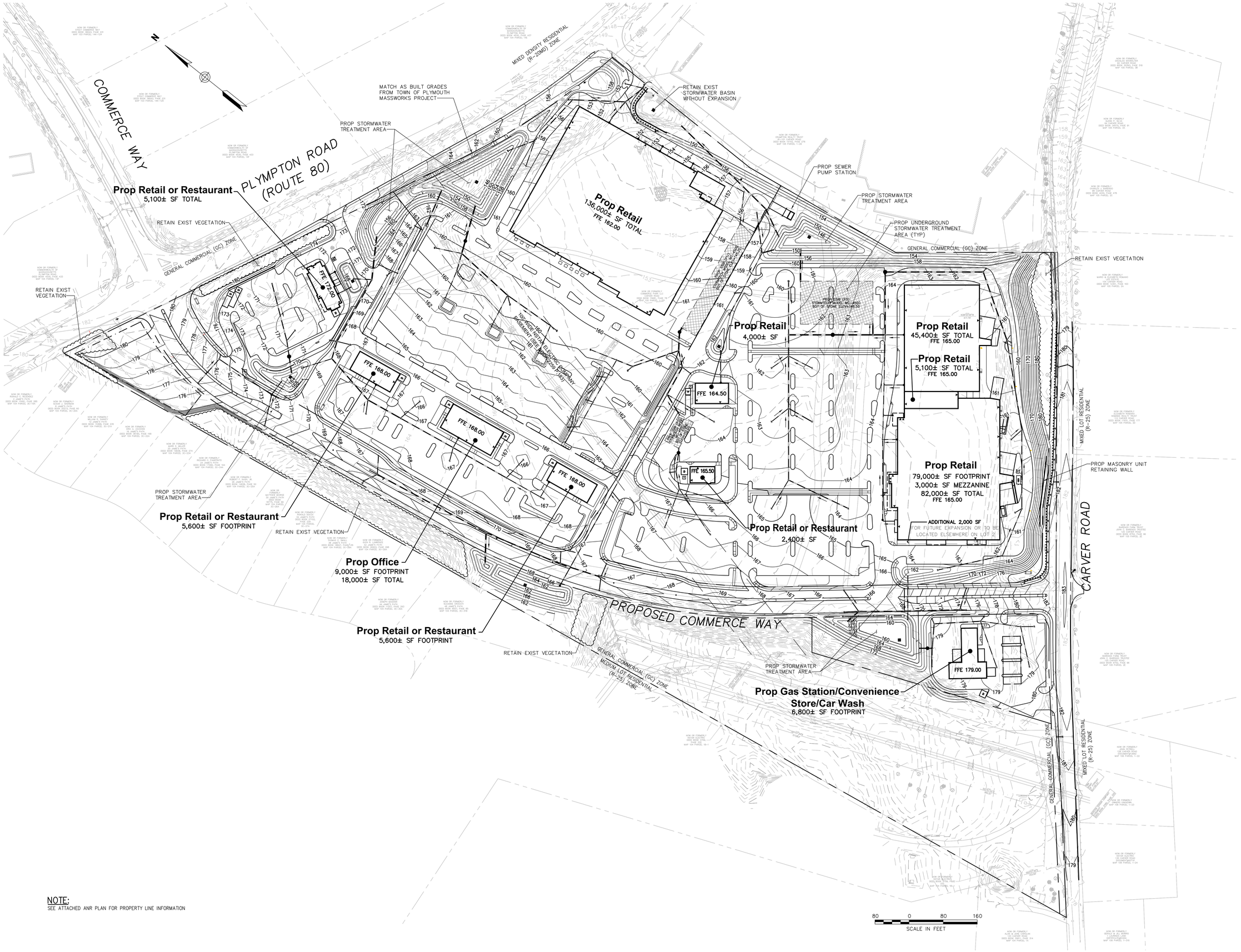

NOTE:
SEE ATTACHED ANR PLAN FOR PROPERTY LINE INFORMATION

TEC

TEC, Inc.

65 Glenn Street
Lawrence, MA 01843
t: (978) 794-1792

169 Ocean Boulevard
Unit 101, PO Box 249
Hampton, NH 03842
t: (603) 601-8154

www.TheEngineeringCorp.com

DESIGNED BY	RJF
DRAWN BY	PFE
CHECKED BY	KRD
DATE	1/20/2015
SCALE	AS NOTED

PREPARED FOR

High Rock Cranberry Crescent, LLC
Suite 2-400
275 Grove Street
Newton, MA 02466

REVISIONS

ISSUED FOR

Construction

PROJECT TITLE

Cranberry Crescent Development

PROJECT LOCATION

Plymouth, Massachusetts

DRAWING TITLE

Overall Site Grading & Drainage Plan

COMMONWEALTH OF MASSACHUSETTS
RICHARD J. FRIBERG JR.
CIVIL
No. 47850
REGISTERED PROFESSIONAL ENGINEER
1/20/15

PROJECT NO. T0372

TEC CAD FILE T0372_SITE GD.dwg

DRAWING NO. C-4

SHEET 4 OF 30

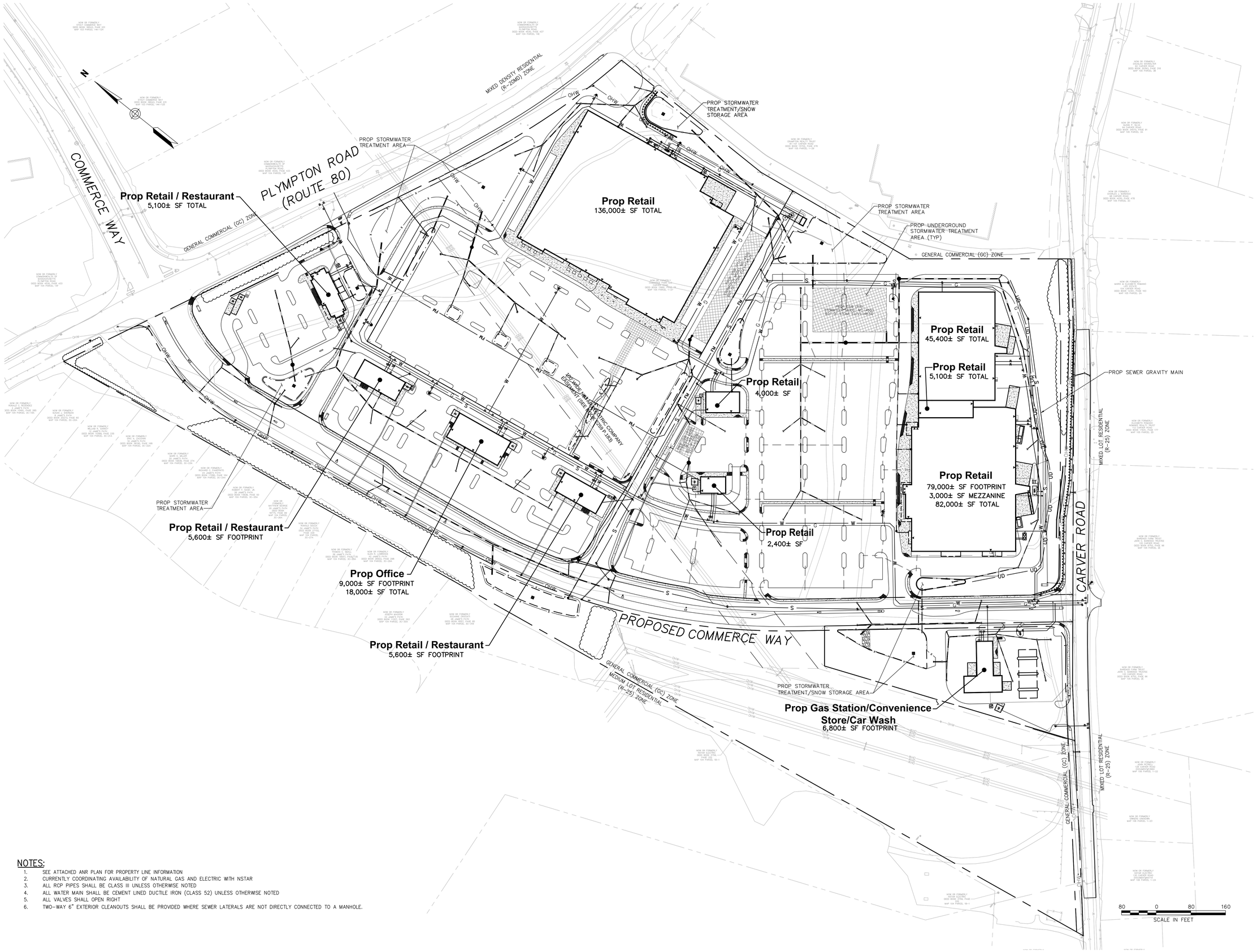

NOTES:

1. SEE ATTACHED ANR PLAN FOR PROPERTY LINE INFORMATION
2. CURRENTLY COORDINATING AVAILABILITY OF NATURAL GAS AND ELECTRIC WITH NSTAR
3. ALL RCP PIPES SHALL BE CLASS III UNLESS OTHERWISE NOTED
4. ALL WATER MAIN SHALL BE CEMENT LINED DUCTILE IRON (CLASS 52) UNLESS OTHERWISE NOTED
5. ALL VALVES SHALL OPEN RIGHT
6. TWO-WAY 6" EXTERIOR CLEANOUTS SHALL BE PROVIDED WHERE SEWER LATERALS ARE NOT DIRECTLY CONNECTED TO A MANHOLE.

TEC

TEC, Inc.

65 Glenn Street
Lawrence, MA 01843
t: (978) 794-1792

169 Ocean Boulevard
Unit 101, PO Box 249
Hampton, NH 03842
t: (603) 601-8154

www.TheEngineeringCorp.com

DESIGNED BY	RJF
DRAWN BY	PFE
CHECKED BY	KRD
DATE	1/20/2015
SCALE	1"=80'

PREPARED FOR

High Rock Cranberry Crescent, LLC
Suite 2-400
275 Grove Street
Newton, MA 02466

REVISIONS

ISSUED FOR

Construction

PROJECT TITLE

Cranberry Crescent Development

PROJECT LOCATION

Plymouth, Massachusetts

DRAWING TITLE

Overall Site Utility Plan

COMMONWEALTH OF MASSACHUSETTS
RICHARD J. FRIBERG JR.
CIVIL
No. 47850
REGISTERED PROFESSIONAL ENGINEER
1/20/15

PROJECT NO. T0372

TEC CAD FILE T0372_SITE UT.dwg

DRAWING NO. C-5

SHEET 5 OF 30

NOTES:

1. DEVELOPMENT SHALL BE ORIENTED TO THE SITE SO THAT CUTTING AND STRIPPING OF VEGETATION AND GRADING ARE MINIMIZED.
2. APPROPRIATE EROSION AND SEDIMENT CONTROL MEASURES SHALL BE INSTALLED PRIOR TO SOIL DISTURBANCE. MEASURES SHALL BE TAKEN TO CONTROL EROSION WITHIN THE PROJECT AREA. WETLAND AREAS AND SURFACE WATERS SHALL BE PROTECTED FROM SEDIMENT.
3. RUNOFF SHALL BE CONTROLLED AND CONVEYED INTO STORM DRAINS AND OTHER OUTLETS SO IT WILL NOT ERODE THE LAND OR CAUSE OFFSITE DAMAGE. SEDIMENT IN RUNOFF SHALL BE TRAPPED BY USING STAKED HAY BALES, SILT FENCING, SEDIMENTATION TRAPS, OR OTHER APPROVED EROSION CONTROL DEVICES.
4. SEDIMENT BASINS SHALL BE CONSTRUCTED WHERE NECESSARY TO DETAIN RUNOFF AND TO TRAP SEDIMENT DURING CONSTRUCTION.
5. SEDIMENT SHALL BE REMOVED ONCE THE VOLUME REACHES ¼ TO ½ THE HEIGHT OF THE SILT FENCE OR HAY BALE.
6. OFFSITE RUNOFF SHALL BE DIVERTED FROM HIGHLY ERODIBLE SOILS AND STEEP SLOPES TO STABLE AREAS.
7. EROSION AND SEDIMENT CONTROLS SHALL BE COORDINATED WITH THE SEQUENCE OF GRADING, DEVELOPMENT AND CONSTRUCTION OPERATIONS. CONTROL MEASURES SHALL BE IN EFFECT PRIOR TO COMMENCEMENT OF EACH INCREMENT/PHASE OF THE PROCESS.
8. SOIL AND OTHER MATERIALS SHALL NOT BE STOCKPILED OR REDISTRIBUTED, EITHER TEMPORARILY OR PERMANENTLY, IN LOCATIONS OR IN SUCH A MANNER AS WOULD CAUSE SUFFOCATION OF TREE ROOT SYSTEMS.
9. GRADING SHALL BE KEPT TO A MINIMUM. TREE REMOVAL SHALL BE MINIMIZED.
10. FOR ACTIVE CONSTRUCTION AREAS, SUCH AS BORROW OR STOCKPILE AREAS, ROADWAY IMPROVEMENTS AND AREAS WITHIN 50 FEET OF A BUILDING UNDER CONSTRUCTION, A PERIMETER SEDIMENT CONTROL SYSTEM SHALL BE INSTALLED AND MAINTAINED TO CONTAIN SOIL.
11. A TRACKING PAD SHALL BE CONSTRUCTED AT ALL ENTRANCE/EXIT POINTS OF THE SITE TO REDUCE THE AMOUNT OF SOIL CARRIED ONTO ROADWAYS AND OFF THE SITE.
12. DUST SHALL BE CONTROLLED AT THE SITE.
13. ALL GRADED AREAS BEYOND THE STREET RIGHT-OF-WAY SHALL BE COVERED WITH FOUR (4) INCHES OF TOPSOIL AND PLANTED WITH A NATIVE SPECIE OF VEGETATIVE COVER, SUFFICIENT TO PREVENT EROSION.
14. PERMANENT SEEDING SHOULD BE UNDERTAKEN IN THE SPRING FROM MARCH THROUGH MAY, AND IN LATE SUMMER AND EARLY FALL FROM AUGUST TO OCTOBER 15. DURING PEAK SUMMER MONTHS AND IN THE FALL AFTER OCTOBER 15, WHEN SEEDING IS FOUND TO BE IMPRACTICAL, AN APPROPRIATE TEMPORARY MULCH SHALL BE APPLIED. PERMANENT SEEDING MAY BE UNDERTAKEN DURING THE SUMMER IF PLANS PROVIDE FOR ADEQUATE MULCHING AND WATERING.
15. PERMANENT VEGETATION AND EROSION CONTROL STRUCTURES, AS NECESSARY, SHALL BE INSTALLED PREFERABLY IMMEDIATELY AFTER CONSTRUCTION IS COMPLETED, BUT OTHER WISE NO LATER THAN THE FIRST FULL SPRING SEASON IMMEDIATELY THEREAFTER. THEY SHALL COMPLY WITH THE EROSION AND SEDIMENTATION VEGETATIVE PRACTICES RECOMMENDED BY THE U.S. SOIL CONSERVATION SERVICE.
16. NATIVE SPECIES SHALL BE USED FOR REVEGETATION.
17. ALL SLOPES STEEPER THAN 3:1 (H:V, 33.3%), AS WELL AS PERIMETER DIKES, SEDIMENT BASINS OR TRAPS, AND EMBANKMENTS SHALL, UPON COMPLETION, BE IMMEDIATELY STABILIZED WITH SOD, SEED AND ANCHORED STRAW MULCH, OR OTHER APPROVED STABILIZATION MEASURES. AREAS OUTSIDE OF THE PERIMETER SEDIMENT CONTROL SYSTEM SHALL NOT BE DISTURBED.
18. MONITORING AND MAINTENANCE OF EROSION AND SEDIMENT CONTROL MEASURES THROUGHOUT THE COURSE OF CONSTRUCTION SHALL BE REQUIRED. THE APPLICANT SHALL SUBMIT TO THE PLANNING BOARD, A COMPLETE OPERATION AND MAINTENANCE PLAN FOR TEMPORARY AND PERMANENT EROSION CONTROL MEASURES, AS PART OF THE APPLICATION PACKAGE.
19. TEMPORARY SEDIMENT TRAPPING DEVICES SHALL NOT BE REMOVED UNTIL PERMANENT STABILIZATION IS ESTABLISHED IN ALL CONTRIBUTORY DRAINAGE AREAS. SIMILARLY, STABILIZATION SHALL BE ESTABLISHED PRIOR TO CONVERTING SEDIMENT TRAPS/BASINS INTO PERMANENT (POST-CONSTRUCTION) STORMWATER MANAGEMENT FACILITIES. ALL FACILITIES USED AS TEMPORARY MEASURES SHALL BE CLEANED PRIOR TO BEING PUT INTO FINAL OPERATIONS.

PROPOSED CONSTRUCTION SEQUENCING:

1. INSTALL EROSION CONTROL MEASURES
2. CONSTRUCT STABILIZED CONSTRUCTION EXITS
3. CONSTRUCT SITE IMPROVEMENTS

NOTE: CONTRACTOR SHALL CONDUCT ALL WORK IN ACCORDANCE WITH THE 2012 NPDES CONSTRUCTION GENERAL PERMIT.

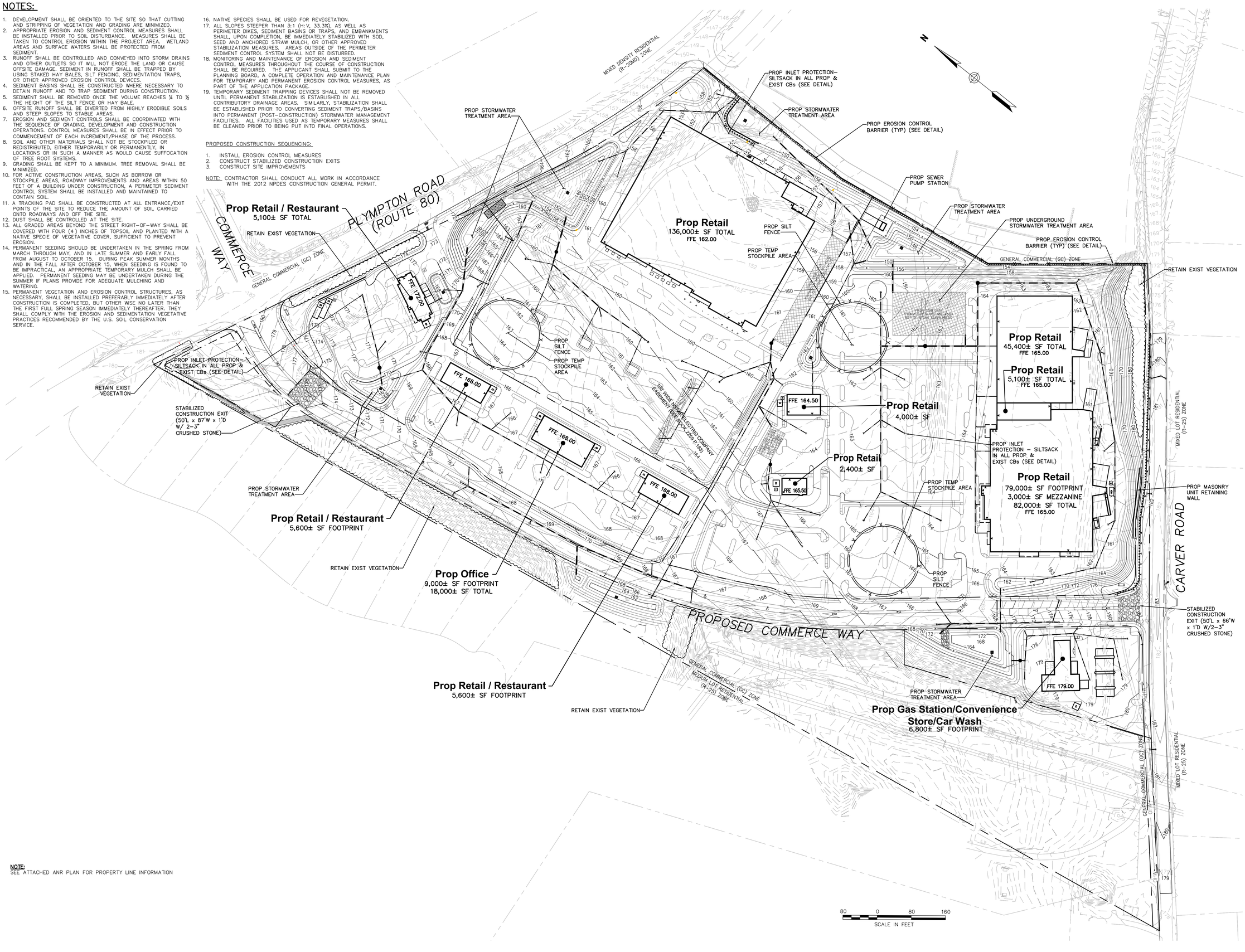

NOTE:
SEE ATTACHED ANR PLAN FOR PROPERTY LINE INFORMATION

TEC, Inc.

65 Glenn Street
Lawrence, MA 01843
t: (978) 794-1792

169 Ocean Boulevard
Unit 101, PO Box 249
Hampton, NH 03842
t: (603) 601-8154

www.TheEngineeringCorp.com

DESIGNED BY	RJF
DRAWN BY	PFE
CHECKED BY	KRD
DATE	1/20/2015
SCALE	1"=80'

PREPARED FOR

High Rock Cranberry Crescent, LLC
Suite 2–400
275 Grove Street
Newton, MA 02466

REVISIONS

ISSUED FOR

Construction

PROJECT TITLE

Cranberry Crescent Development

PROJECT LOCATION

Plymouth, Massachusetts

DRAWING TITLE

Erosion & Sedimentation Control Plan

COMMONWEALTH OF MASSACHUSETTS
RICHARD J. FRIBERG JR.
CIVIL
No. 47850
REGISTERED PROFESSIONAL ENGINEER
1/20/15

PROJECT NO. T0372

TEC CAD FILE T0372_SITE ER.dwg

DRAWING NO. C–6

SHEET 6 OF 30

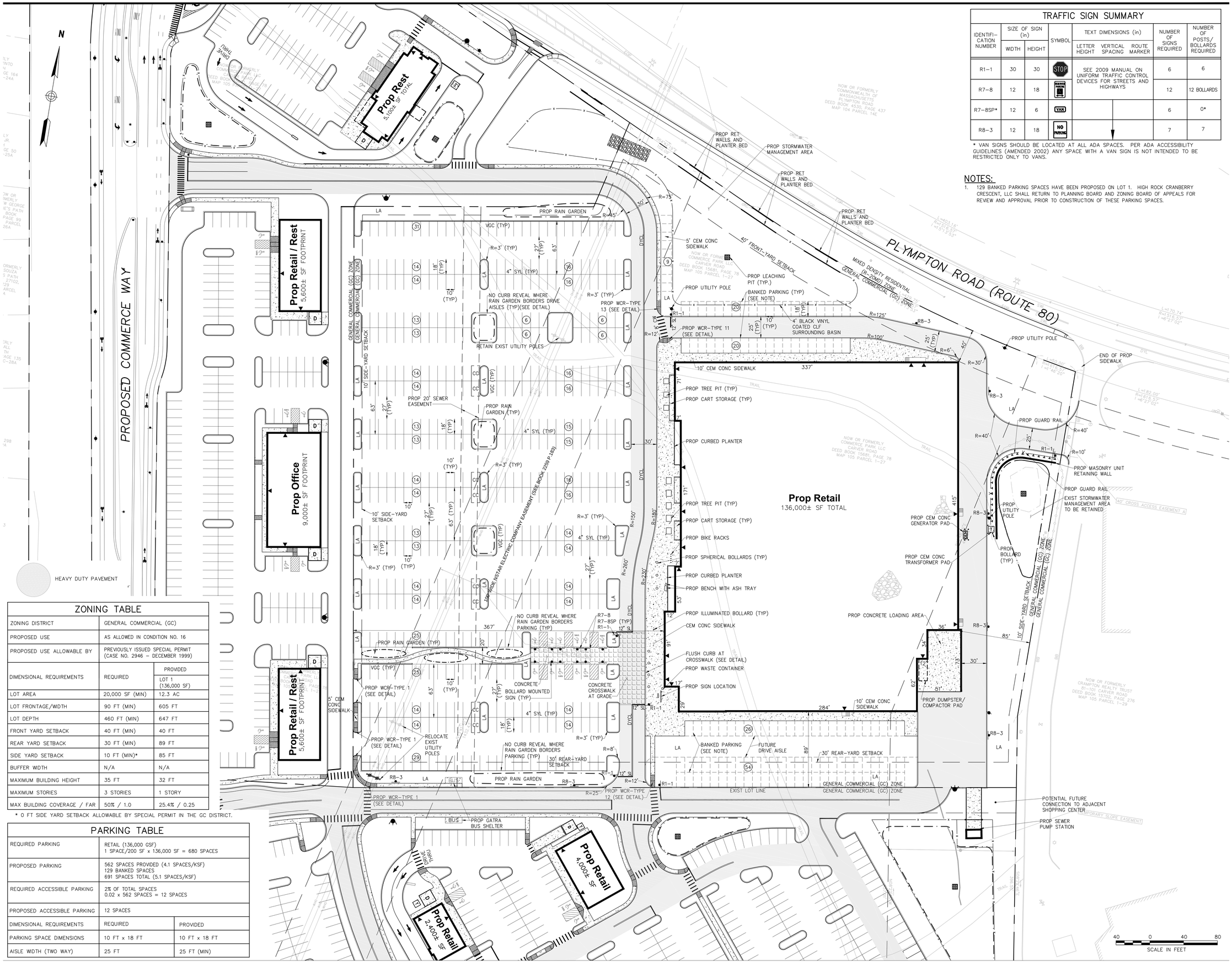

TRAFFIC SIGN SUMMARY

IDENTIFICATION NUMBER	SIZE OF SIGN (in) WIDTH	SIZE OF SIGN (in) HEIGHT	SYMBOL	TEXT DIMENSIONS (in) LETTER HEIGHT / VERTICAL SPACING / ROUTE MARKER	NUMBER OF SIGNS REQUIRED	NUMBER OF POSTS/ BOLLARDS REQUIRED
R1-1	30	30	STOP	SEE 2009 MANUAL ON UNIFORM TRAFFIC CONTROL DEVICES FOR STREETS AND HIGHWAYS	6	6
R7-8	12	18	HANDICAPPED PARKING		12	12 BOLLARDS
R7-8SP*	12	6	VAN		6	0*
R8-3	12	18	NO PARKING		7	7

* VAN SIGNS SHOULD BE LOCATED AT ALL ADA SPACES. PER ADA ACCESSIBILITY GUIDELINES (AMENDED 2002) ANY SPACE WITH A VAN SIGN IS NOT INTENDED TO BE RESTRICTED ONLY TO VANS.

NOTES:

1. 129 BANKED PARKING SPACES HAVE BEEN PROPOSED ON LOT 1. HIGH ROCK CRANBERRY CRESCENT, LLC SHALL RETURN TO PLANNING BOARD AND ZONING BOARD OF APPEALS FOR REVIEW AND APPROVAL PRIOR TO CONSTRUCTION OF THESE PARKING SPACES.

ZONING TABLE

ZONING DISTRICT	GENERAL COMMERCIAL (GC)	
PROPOSED USE	AS ALLOWED IN CONDITION NO. 16	
PROPOSED USE ALLOWABLE BY	PREVIOUSLY ISSUED SPECIAL PERMIT (CASE NO. 2946 – DECEMBER 1999)	
DIMENSIONAL REQUIREMENTS	REQUIRED	PROVIDED LOT 1 (136,000 SF)
LOT AREA	20,000 SF (MIN)	12.3 AC
LOT FRONTAGE/WIDTH	90 FT (MIN)	605 FT
LOT DEPTH	460 FT (MIN)	647 FT
FRONT YARD SETBACK	40 FT (MIN)	40 FT
REAR YARD SETBACK	30 FT (MIN)	89 FT
SIDE YARD SETBACK	10 FT (MIN)*	85 FT
BUFFER WIDTH	N/A	N/A
MAXIMUM BUILDING HEIGHT	35 FT	32 FT
MAXIMUM STORIES	3 STORIES	1 STORY
MAX BUILDING COVERAGE / FAR	50% / 1.0	25.4% / 0.25

* 0 FT SIDE YARD SETBACK ALLOWABLE BY SPECIAL PERMIT IN THE GC DISTRICT.

PARKING TABLE

REQUIRED PARKING	RETAIL (136,000 GSF) 1 SPACE/200 SF x 136,000 SF = 680 SPACES	
PROPOSED PARKING	562 SPACES PROVIDED (4.1 SPACES/KSF) 129 BANKED SPACES 691 SPACES TOTAL (5.1 SPACES/KSF)	
REQUIRED ACCESSIBLE PARKING	2% OF TOTAL SPACES 0.02 x 562 SPACES = 12 SPACES	
PROPOSED ACCESSIBLE PARKING	12 SPACES	
DIMENSIONAL REQUIREMENTS	REQUIRED	PROVIDED
PARKING SPACE DIMENSIONS	10 FT x 18 FT	10 FT x 18 FT
AISLE WIDTH (TWO WAY)	25 FT	25 FT (MIN)

TEC

TEC, Inc.

65 Glenn Street
Lawrence, MA 01843
t: (978) 794-1792

169 Ocean Boulevard
Unit 101, PO Box 249
Hampton, NH 03842
t: (603) 601-8154

www.TheEngineeringCorp.com

DESIGNED BY	RJF
DRAWN BY	PFE
CHECKED BY	KRD
DATE	1/20/2015
SCALE	1"=40'

PREPARED FOR

High Rock Cranberry Crescent, LLC
Suite 2-400
275 Grove Street
Newton, MA 02466

REVISIONS

ISSUED FOR

Construction

PROJECT TITLE

Cranberry Crescent Development

PROJECT LOCATION

Plymouth, Massachusetts

DRAWING TITLE

Lot 1 – Layout & Materials Plan

COMMONWEALTH OF MASSACHUSETTS
RICHARD J. FRIBERG JR.
CIVIL
No. 47850
REGISTERED PROFESSIONAL ENGINEER
1/20/15

PROJECT NO. T0372

TEC CAD FILE T0372_LM_LOT1.dwg

DRAWING NO. C-7

SHEET 7 OF 30

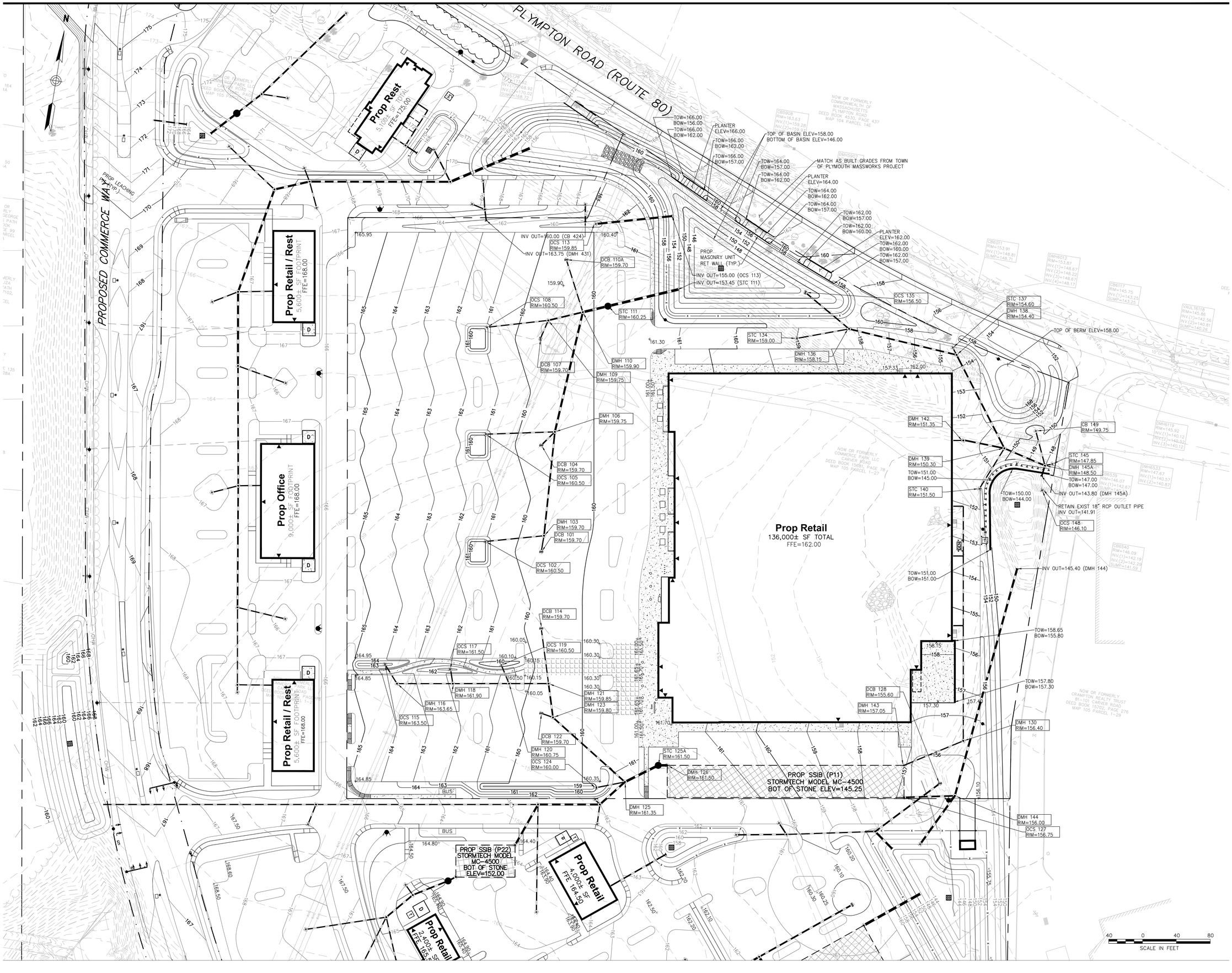

TEC

TEC, Inc.

65 Glenn Street
Lawrence, MA 01843
t: (978) 794-1792

169 Ocean Boulevard
Unit 101, PO Box 249
Hampton, NH 03842
t: (603) 601-8154

www.TheEngineeringCorp.com

DESIGNED BY	RJF
DRAWN BY	PFE
CHECKED BY	KRD
DATE	1/20/2015
SCALE	1"=40'

PREPARED FOR

High Rock Cranberry Crescent, LLC
Suite 2-400
275 Grove Street
Newton, MA 02466

REVISIONS

ISSUED FOR

Construction

PROJECT TITLE

Cranberry Crescent Development

PROJECT LOCATION

Plymouth, Massachusetts

DRAWING TITLE

Lot 1 – Grading & Drainage Plan

COMMONWEALTH OF MASSACHUSETTS
RICHARD J. FRIBERG JR.
CIVIL
No. 47880
REGISTERED PROFESSIONAL ENGINEER
1/20/15

PROJECT NO. T0372

TEC CAD FILE T0372_GD_LOT1.dwg

DRAWING NO. C-8

SHEET 8 OF 30

NOTES:

1. CURRENTLY COORDINATING AVAILABILITY OF NATURAL GAS AND ELECTRIC WITH NSTAR.
2. ALL RCP PIPE SHALL BE CLASS III UNLESS OTHERWISE NOTED.
3. ALL WATER MAIN SHALL BE CEMENT LINED DUCTILE IRON (CLASS 52) UNLESS OTHERWISE NOTED.
4. ALL WATER VALVES SHALL OPEN RIGHT.
5. TWO-WAY 6" EXTERIOR CLEANOUTS SHALL BE PROVIDED WHERE SEWER LATERALS ARE NOT DIRECTLY CONNECTED TO A MANHOLE.

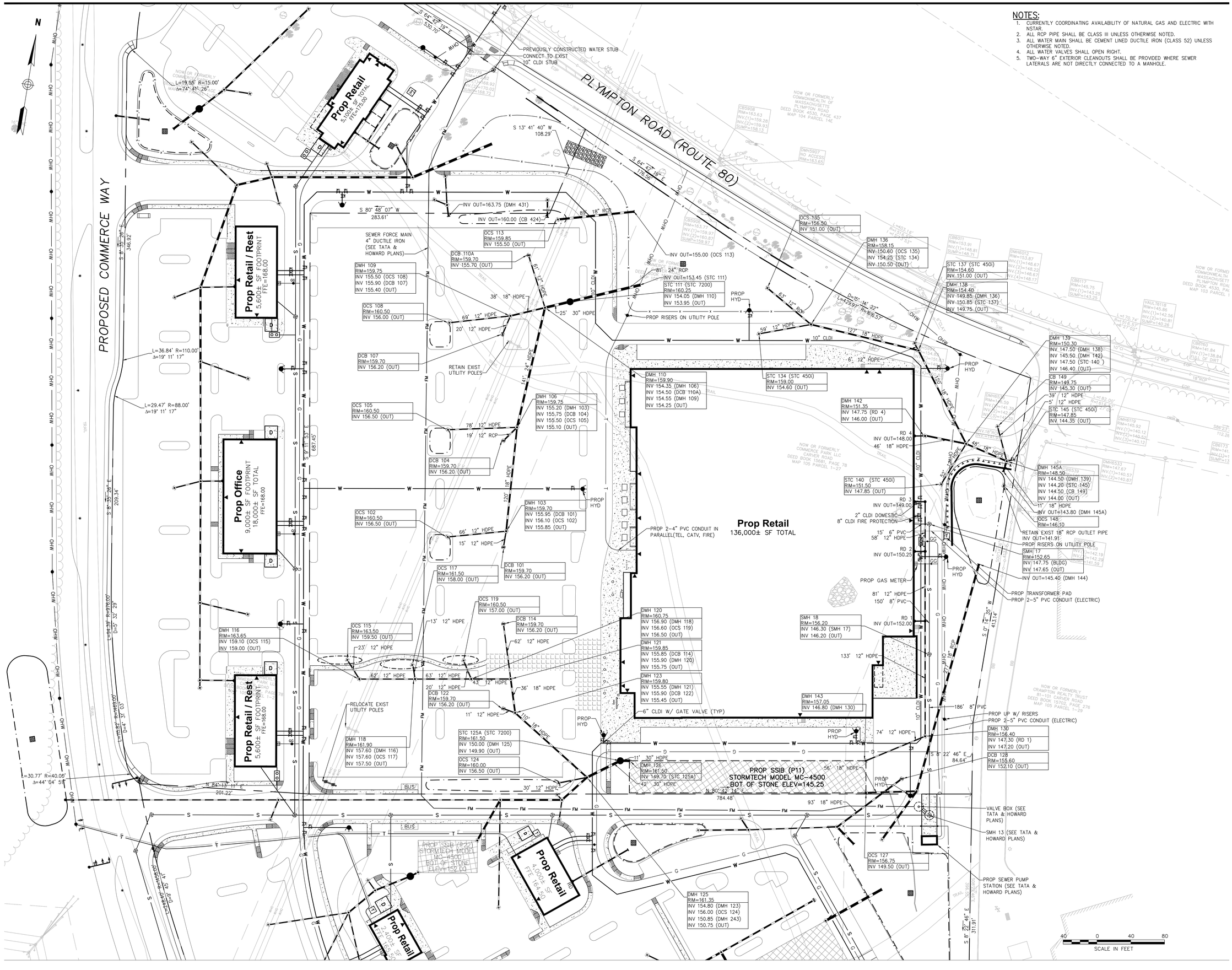

TEC

TEC, Inc.

65 Glenn Street
Lawrence, MA 01843
t: (978) 794-1792

169 Ocean Boulevard
Unit 101, PO Box 249
Hampton, NH 03842
t: (603) 601-8154

www.TheEngineeringCorp.com

DESIGNED BY	RJF
DRAWN BY	PFE
CHECKED BY	KRD
DATE	1/20/2015
SCALE	1"=40'

PREPARED FOR

High Rock Cranberry Crescent, LLC
Suite 2-400
275 Grove Street
Newton, MA 02466

REVISIONS

ISSUED FOR

Construction

PROJECT TITLE

Cranberry Crescent Development

PROJECT LOCATION

Plymouth, Massachusetts

DRAWING TITLE

Lot 1 - Utility Plan

COMMONWEALTH OF MASSACHUSETTS
RICHARD J. FRIBERG JR.
CIVIL
No. 47550
REGISTERED PROFESSIONAL ENGINEER
1/20/15

PROJECT NO. T0372

TEC CAD FILE T0372_UT_LOT1.dwg

DRAWING NO. C-9

SHEET 9 OF 30

HEAVY DUTY PAVEMENT

ZONING TABLE

ZONING DISTRICT	GENERAL COMMERCIAL (GC)	
PROPOSED USE	AS ALLOWED IN CONDITION NO. 16	
PROPOSED USE ALLOWABLE BY	PREVIOUSLY ISSUED SPECIAL PERMIT (CASE NO. 2946 – DECEMBER 1999)	
DIMENSIONAL REQUIREMENTS	REQUIRED	PROVIDED
LOT AREA	20,000 SF (MIN)	17.4 AC
LOT FRONTAGE/WIDTH	90 FT (MIN)	775 FT
LOT DEPTH	460 FT (MIN)	896 FT
FRONT YARD SETBACK	40 FT (MIN)	76 FT
REAR YARD SETBACK	30 FT (MIN)	50 FT
SIDE YARD SETBACK	10 FT (MIN)*	76 FT
BUFFER WIDTH (FROM PUBLIC WAY)	10 FT (MIN)	10 FT
OPEN SPACE	N/A	25%
MAXIMUM BUILDING HEIGHT	35 FT	32 FT
MAXIMUM STORIES	3 STORIES	1 STORY
MAX BUILDING COVERAGE / FAR	50% / 1.0	17.9% / 0.18
PYLON SIGN SIZE (SF)	N/A	TBD

* 0 FT SIDE YARD SETBACK ALLOWABLE BY SPECIAL PERMIT IN THE GC DISTRICT.

PARKING TABLE

REQUIRED PARKING	RETAIL (138,900 GSF) + 2,000 SF RESERVED 1 SPACE/200 SF x 140,900 SF = 705 SPACES	
PROPOSED PARKING	716 SPACES (5.1 SPACES/KSF)	
REQUIRED ACCESSIBLE PARKING	2% OF TOTAL SPACES 0.02 x 716 SPACES = 15 SPACES	
PROPOSED ACCESSIBLE PARKING	27 SPACES (3.75% OF TOTAL)	
DIMENSIONAL REQUIREMENTS	REQUIRED	PROVIDED
PARKING SPACE DIMENSIONS	10 FT x 18 FT	10 FT x 19 FT
ACCESSIBLE SPACE DIMENSIONS	10 FT x 18 FT	10 FT x 19 FT
AISLE WIDTH (TWO WAY)	25 FT	25 FT (MIN)

NOTES:

1. MONOLITHIC CONCRETE CURB ALONG FRONT OF STORES SHALL BE PAINTED YELLOW.
2. ACCESSIBLE RAMPS SHALL HAVE AN EXPOSED AGGREGATE SURFACE.
3. OUTDOOR DISPLAY AREAS MAY VARY WITHIN SIDEWALK ADJACENT TO BUILDINGS.
4. SNOW SHALL BE STORED WITHIN LANDSCAPED ISLANDS IN ADDITION TO THE AREAS IDENTIFIED ON THIS PLAN.
5. 4" STEEL TUBE RAIL SHALL BE PAINTED GREEN.
6. PARKING LOT STRIPING SHALL BE 4" SYL, UNLESS OTHERWISE NOTED.
7. STOP LINES AND CROSSWALK PAVEMENT MARKINGS SHALL BE 12" SWL, UNLESS OTHERWISE NOTED.
8. DECORATIVE LIGHT POLE BASES MAY BE PROPOSED ALONG STORE FRONTS WHEN FINAL ARCHITECTURAL PLANS ARE SUBMITTED.

TRAFFIC SIGN SUMMARY

IDENTIFI–CATION NUMBER	SIZE OF SIGN (in) WIDTH	SIZE OF SIGN (in) HEIGHT	SYMBOL	TEXT DIMENSIONS (in) LETTER HEIGHT / VERTICAL SPACING / ROUTE MARKER	NUMBER OF SIGNS REQUIRED	NUMBER OF POSTS/ BOLLARDS REQUIRED
R1–1	30	30	STOP	SEE 2009 MANUAL ON UNIFORM TRAFFIC CONTROL DEVICES FOR STREETS AND HIGHWAYS	17	16
R3–1	24	24			1	0
R3–2	24	24			1	0
R5–1	20	20	DO NOT ENTER		6	6
R6–1L	20	6	24		2	0
R7–8	12	18	RESERVED PARKING		27	13 POSTS 7 BOLLARDS
R7–8SP*	12	6	VAN		14	0*
R8–3	12	18	NO PARKING		5	5
R8–31	12	18	NO PARKING FIRE LANE		4	4

* VAN SIGNS SHOULD BE LOCATED AT ALL ADA SPACES. PER ADA ACCESSIBILITY GUIDELINES (AMENDED 2002) ANY SPACE WITH A VAN SIGN IS NOT INTENDED TO BE RESTRICTED ONLY TO VANS.

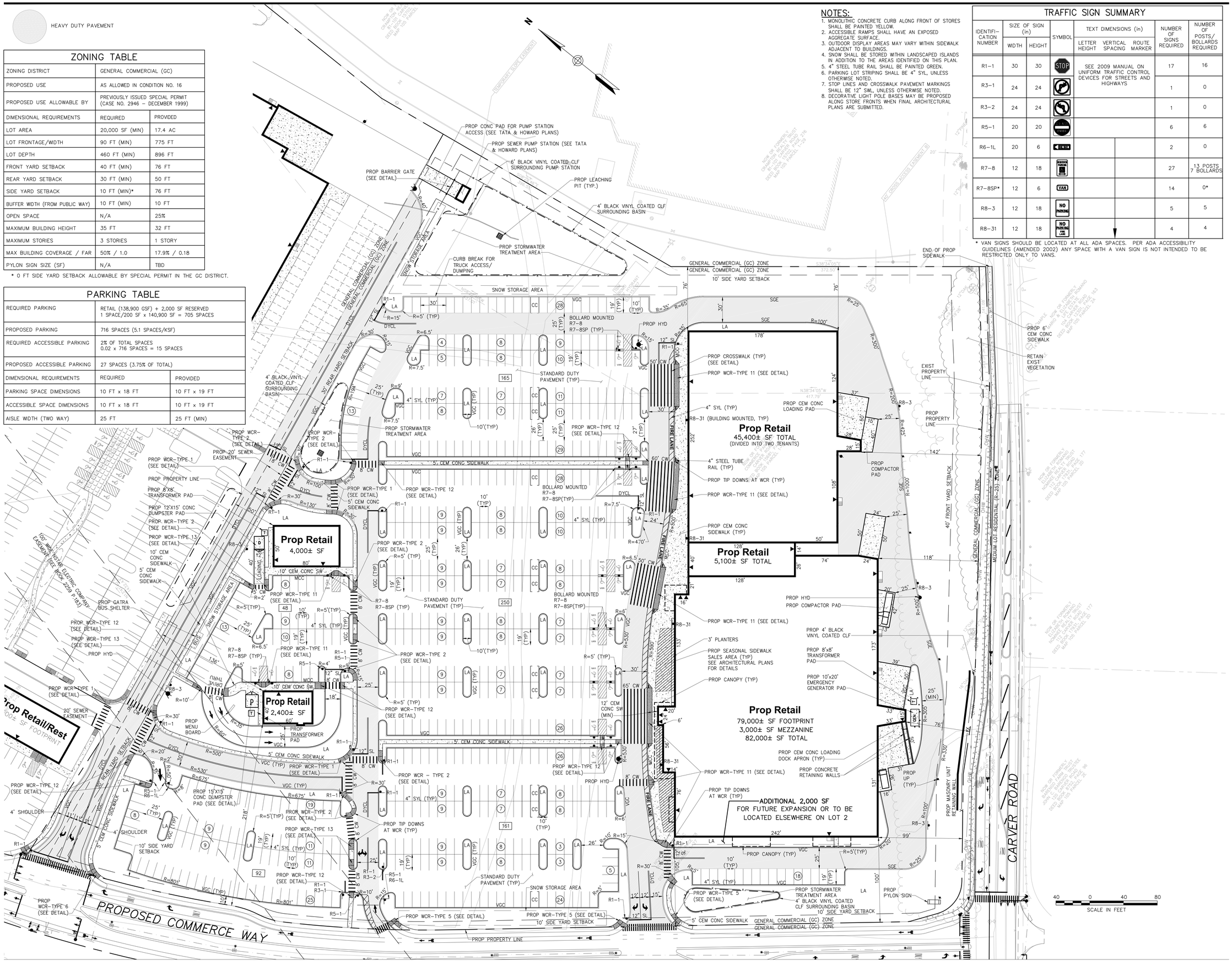

TEC

TEC, Inc.

65 Glenn Street
Lawrence, MA 01843
t: (978) 794-1792

169 Ocean Boulevard
Unit 101, PO Box 249
Hampton, NH 03842
t: (603) 601-8154

www.TheEngineeringCorp.com

DESIGNED BY	RJF
DRAWN BY	PFE
CHECKED BY	KRD
DATE	1/20/2015
SCALE	1"=40'

PREPARED FOR

High Rock Cranberry Crescent, LLC
Suite 2–400
275 Grove Street
Newton, MA 02466

REVISIONS

ISSUED FOR

Construction

PROJECT TITLE

Cranberry Crescent Development

PROJECT LOCATION

Plymouth, Massachusetts

DRAWING TITLE

Lot 2 – Layout & Materials Plan

COMMONWEALTH OF MASSACHUSETTS
RICHARD J. FRIBERG JR.
CIVIL
No. 47850
REGISTERED PROFESSIONAL ENGINEER
1/20/15

PROJECT NO. T0372

TEC CAD FILE T0372_LM_LOT2.dwg

DRAWING NO. C–10

SHEET 10 OF 30

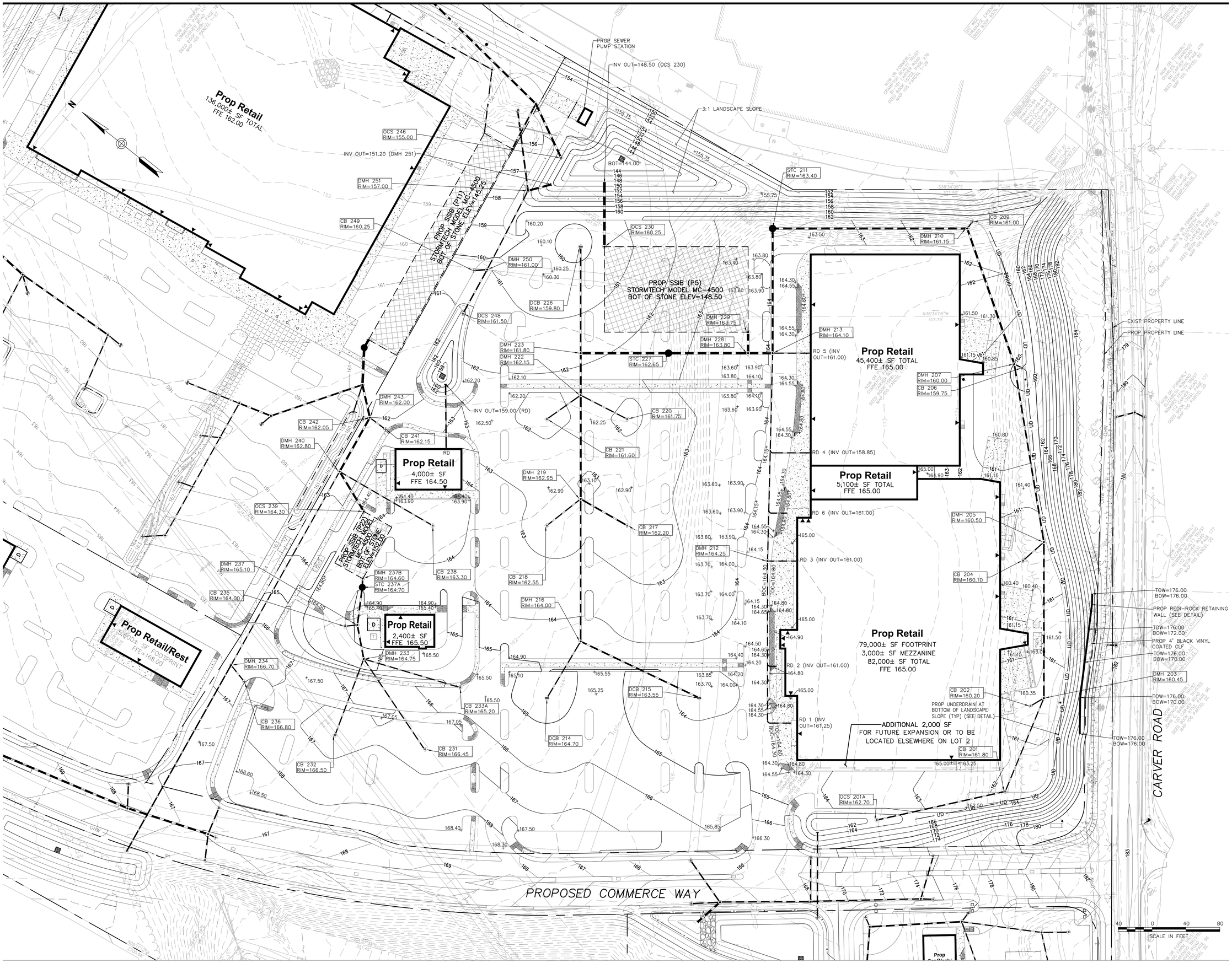

TEC

TEC, Inc.

65 Glenn Street
Lawrence, MA 01843
t: (978) 794-1792

169 Ocean Boulevard
Unit 101, PO Box 249
Hampton, NH 03842
t: (603) 601-8154

www.TheEngineeringCorp.com

DESIGNED BY	RJF
DRAWN BY	PFE
CHECKED BY	KRD
DATE	1/20/2015
SCALE	1"=40'

PREPARED FOR

High Rock Cranberry Crescent, LLC
Suite 2-400
275 Grove Street
Newton, MA 02466

REVISIONS

ISSUED FOR

Construction

PROJECT TITLE

Cranberry Crescent Development

PROJECT LOCATION

Plymouth, Massachusetts

DRAWING TITLE

Lot 2 – Grading & Drainage Plan

COMMONWEALTH OF MASSACHUSETTS
RICHARD J. FRIBERG JR.
CIVIL
No. 47850
REGISTERED PROFESSIONAL ENGINEER
1/20/15

PROJECT NO. T0372

TEC CAD FILE T0372_GD_LOT2.dwg

DRAWING NO. C-11

SHEET 11 OF 30

NOTES:

1. GREASE TRAP TO BE VENTED BACK TO BUILDING ROOF.
2. GREASE TRAP, AND PUMP STATION MANHOLE COVERS TO BE WATER/AIR TIGHT AND LOCATED AWAY FROM PUBLIC AREAS.
3. SEWER LINE SHALL BE DUCTILE IRON FOR 10 FEET ON EITHER SIDE OF WATER LINE CROSSINGS.
4. DROP INVERTS SHALL BE CONSTRUCTED AS PER TOWN STANDARDS.
5. SEWER SERVICE INVERTS SHALL BE 8 FEET BELOW FINISHED FLOOR ELEVATION.
6. CURRENTLY COORDINATING AVAILABILITY OF NATURAL GAS AND ELECTRIC WITH NSTAR.
7. ALL RCP PIPE SHALL BE CLASS III UNLESS OTHERWISE NOTED.
8. ALL WATER MAIN SHALL BE CEMENT LINED DUCTILE IRON PIPE (CLASS 52) UNLESS OTHERWISE NOTED.
9. ALL WATER VALVES SHALL OPEN RIGHT.
10. TWO-WAY 6" EXTERIOR CLEANOUTS SHALL BE PROVIDED WHERE SEWER LATERALS ARE NOT DIRECTLY CONNECTED TO A MANHOLE.

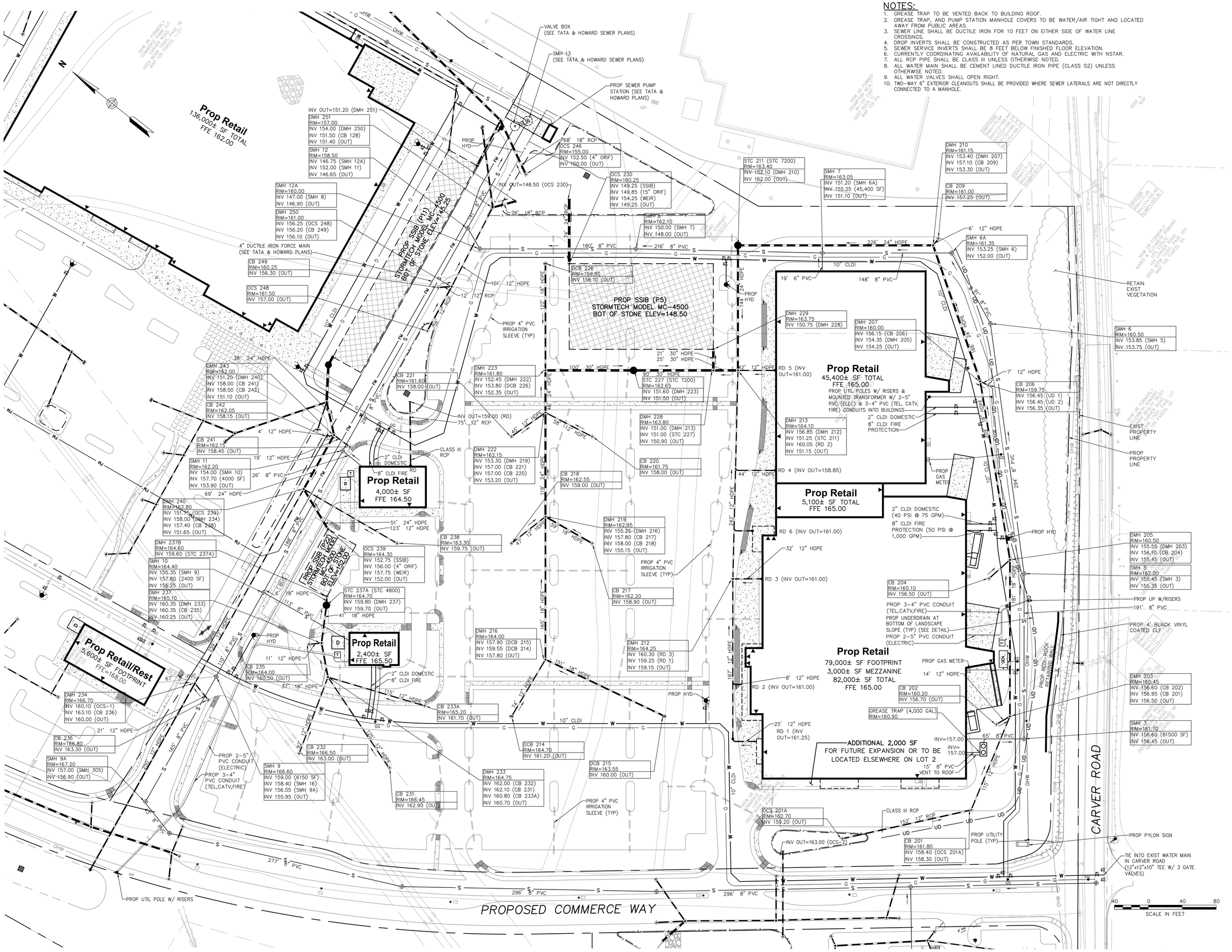

TEC

TEC, Inc.

65 Glenn Street
Lawrence, MA 01843
t: (978) 794-1792

169 Ocean Boulevard
Unit 101, PO Box 249
Hampton, NH 03842
t: (603) 601-8154

www.TheEngineeringCorp.com

DESIGNED BY	RJF
DRAWN BY	PFE
CHECKED BY	KRD
DATE	1/20/2015
SCALE	1"=40'

PREPARED FOR

High Rock Cranberry Crescent, LLC
Suite 2-400
275 Grove Street
Newton, MA 02466

REVISIONS

ISSUED FOR

Construction

PROJECT TITLE

Cranberry Crescent Development

PROJECT LOCATION

Plymouth, Massachusetts

DRAWING TITLE

Lot 2 – Utility Plan

COMMONWEALTH OF MASSACHUSETTS
RICHARD J. FRIBERG JR.
CIVIL
No. 47850
REGISTERED PROFESSIONAL ENGINEER
1/20/15

PROJECT NO.
T0372

TEC CAD FILE
T0372_UT_LOT2.dwg

DRAWING NO.
C-12

SHEET 12 OF 30

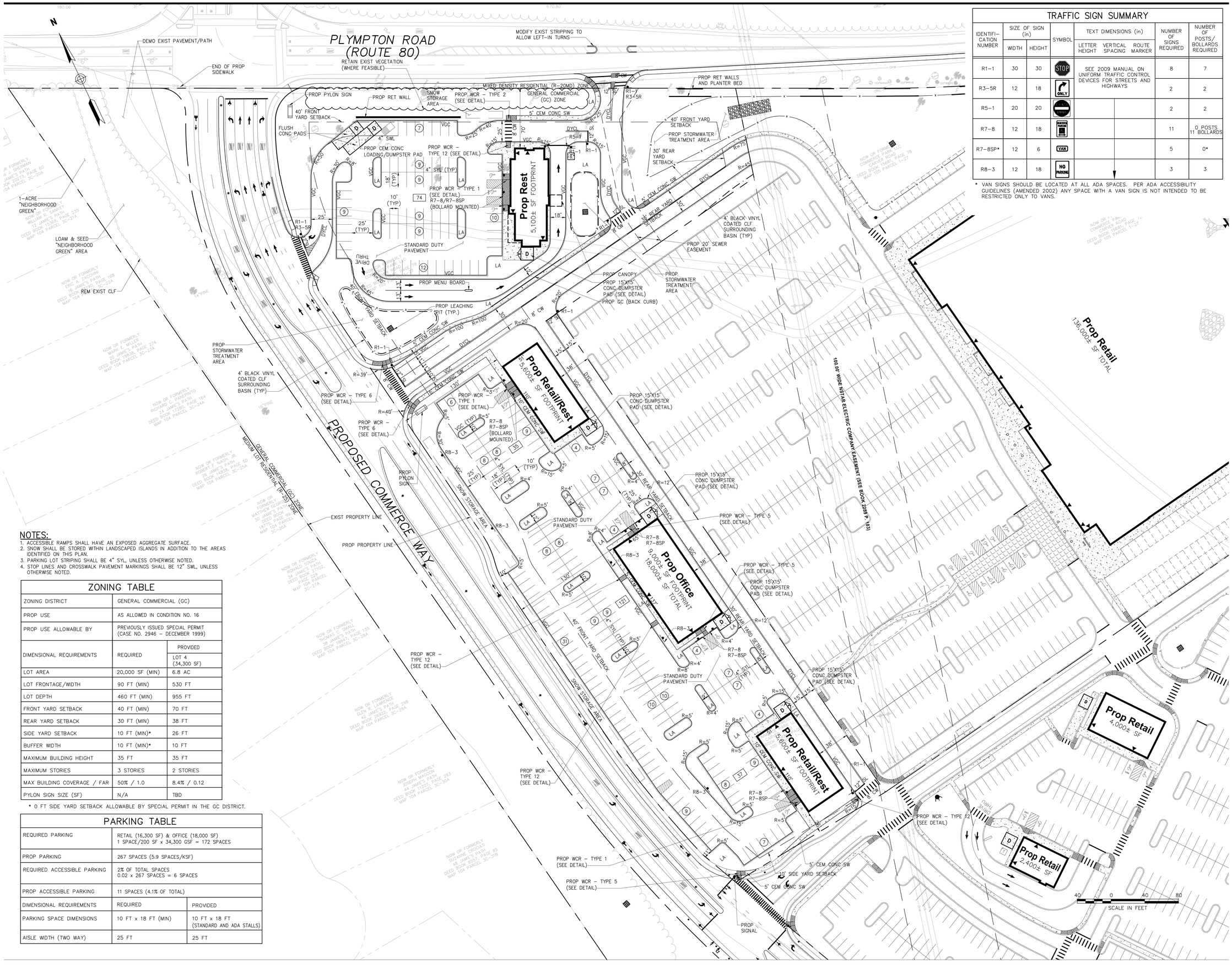

NOTES:

1. ACCESSIBLE RAMPS SHALL HAVE AN EXPOSED AGGREGATE SURFACE.
2. SNOW SHALL BE STORED WITHIN LANDSCAPED ISLANDS IN ADDITION TO THE AREAS IDENTIFIED ON THIS PLAN.
3. PARKING LOT STRIPING SHALL BE 4" SYL, UNLESS OTHERWISE NOTED.
4. STOP LINES AND CROSSWALK PAVEMENT MARKINGS SHALL BE 12" SWL, UNLESS OTHERWISE NOTED.

ZONING TABLE

ZONING DISTRICT	GENERAL COMMERCIAL (GC)	
PROP USE	AS ALLOWED IN CONDITION NO. 16	
PROP USE ALLOWABLE BY	PREVIOUSLY ISSUED SPECIAL PERMIT (CASE NO. 2946 – DECEMBER 1999)	
DIMENSIONAL REQUIREMENTS	REQUIRED	PROVIDED LOT 4 (34,300 SF)
LOT AREA	20,000 SF (MIN)	6.8 AC
LOT FRONTAGE/WIDTH	90 FT (MIN)	530 FT
LOT DEPTH	460 FT (MIN)	955 FT
FRONT YARD SETBACK	40 FT (MIN)	70 FT
REAR YARD SETBACK	30 FT (MIN)	38 FT
SIDE YARD SETBACK	10 FT (MIN)*	26 FT
BUFFER WIDTH	10 FT (MIN)*	10 FT
MAXIMUM BUILDING HEIGHT	35 FT	35 FT
MAXIMUM STORIES	3 STORIES	2 STORIES
MAX BUILDING COVERAGE / FAR	50% / 1.0	8.4% / 0.12
PYLON SIGN SIZE (SF)	N/A	TBD

* 0 FT SIDE YARD SETBACK ALLOWABLE BY SPECIAL PERMIT IN THE GC DISTRICT.

PARKING TABLE

REQUIRED PARKING	RETAIL (16,300 SF) & OFFICE (18,000 SF) 1 SPACE/200 SF x 34,300 GSF = 172 SPACES	
PROP PARKING	267 SPACES (5.9 SPACES/KSF)	
REQUIRED ACCESSIBLE PARKING	2% OF TOTAL SPACES 0.02 x 267 SPACES = 6 SPACES	
PROP ACCESSIBLE PARKING	11 SPACES (4.1% OF TOTAL)	
DIMENSIONAL REQUIREMENTS	REQUIRED	PROVIDED
PARKING SPACE DIMENSIONS	10 FT x 18 FT (MIN)	10 FT x 18 FT (STANDARD AND ADA STALLS)
AISLE WIDTH (TWO WAY)	25 FT	25 FT

TRAFFIC SIGN SUMMARY

IDENTIFICATION NUMBER	SIZE OF SIGN (in) WIDTH	HEIGHT	SYMBOL	TEXT DIMENSIONS (in) LETTER HEIGHT	VERTICAL SPACING	ROUTE MARKER	NUMBER OF SIGNS REQUIRED	NUMBER OF POSTS/BOLLARDS REQUIRED
R1-1	30	30	STOP	SEE 2009 MANUAL ON UNIFORM TRAFFIC CONTROL DEVICES FOR STREETS AND HIGHWAYS			8	7
R3-5R	12	18	ONLY				2	2
R5-1	20	20	DO NOT ENTER				2	2
R7-8	12	18	RESERVED PARKING				11	0 POSTS 11 BOLLARDS
R7-8SP*	12	6	VAN				5	0*
R8-3	12	18	NO PARKING				3	3

* VAN SIGNS SHOULD BE LOCATED AT ALL ADA SPACES. PER ADA ACCESSIBILITY GUIDELINES (AMENDED 2002) ANY SPACE WITH A VAN SIGN IS NOT INTENDED TO BE RESTRICTED ONLY TO VANS.

TEC

TEC, Inc.

65 Glenn Street
Lawrence, MA 01843
t: (978) 794-1792

169 Ocean Boulevard
Unit 101, PO Box 249
Hampton, NH 03842
t: (603) 601-8154

www.TheEngineeringCorp.com

DESIGNED BY	RJF
DRAWN BY	PFE
CHECKED BY	KRD
DATE	1/20/2015
SCALE	1"=40'

PREPARED FOR

High Rock Cranberry Crescent, LLC
Suite 2-400
275 Grove Street
Newton, MA 02466

REVISIONS

ISSUED FOR

Construction

PROJECT TITLE

Cranberry Crescent Development

PROJECT LOCATION

Plymouth, Massachusetts

DRAWING TITLE

Lot 4 – Layout & Materials Plan

COMMONWEALTH OF MASSACHUSETTS
RICHARD J. FRISBERG JR.
CIVIL
No. 47850
REGISTERED PROFESSIONAL ENGINEER
1/20/15

PROJECT NO. T0372

TEC CAD FILE T0372_LM_LOT4.dwg

DRAWING NO. C-13

SHEET 13 OF 30

TEC

TEC, Inc.

65 Glenn Street
Lawrence, MA 01843
t: (978) 794-1792

169 Ocean Boulevard
Unit 101, PO Box 249
Hampton, NH 03842
t: (603) 601-8154

www.TheEngineeringCorp.com

DESIGNED BY	RJF
DRAWN BY	PFE
CHECKED BY	KRD
DATE	1/20/2015
SCALE	1"=40'

PREPARED FOR

High Rock Cranberry Crescent, LLC
Suite 2-400
275 Grove Street
Newton, MA 02466

REVISIONS

ISSUED FOR

Construction

PROJECT TITLE

Cranberry Crescent Development

PROJECT LOCATION

Plymouth, Massachusetts

DRAWING TITLE

Lot 4 – Grading & Drainage Plan

COMMONWEALTH OF MASSACHUSETTS
RICHARD J. FRIBERG JR.
CIVIL
No. 47850
REGISTERED PROFESSIONAL ENGINEER

1/20/15

PROJECT NO.
T0372

TEC CAD FILE
T0372_GD_LOT4.dwg

DRAWING NO.
C-14

SHEET 14 OF 30

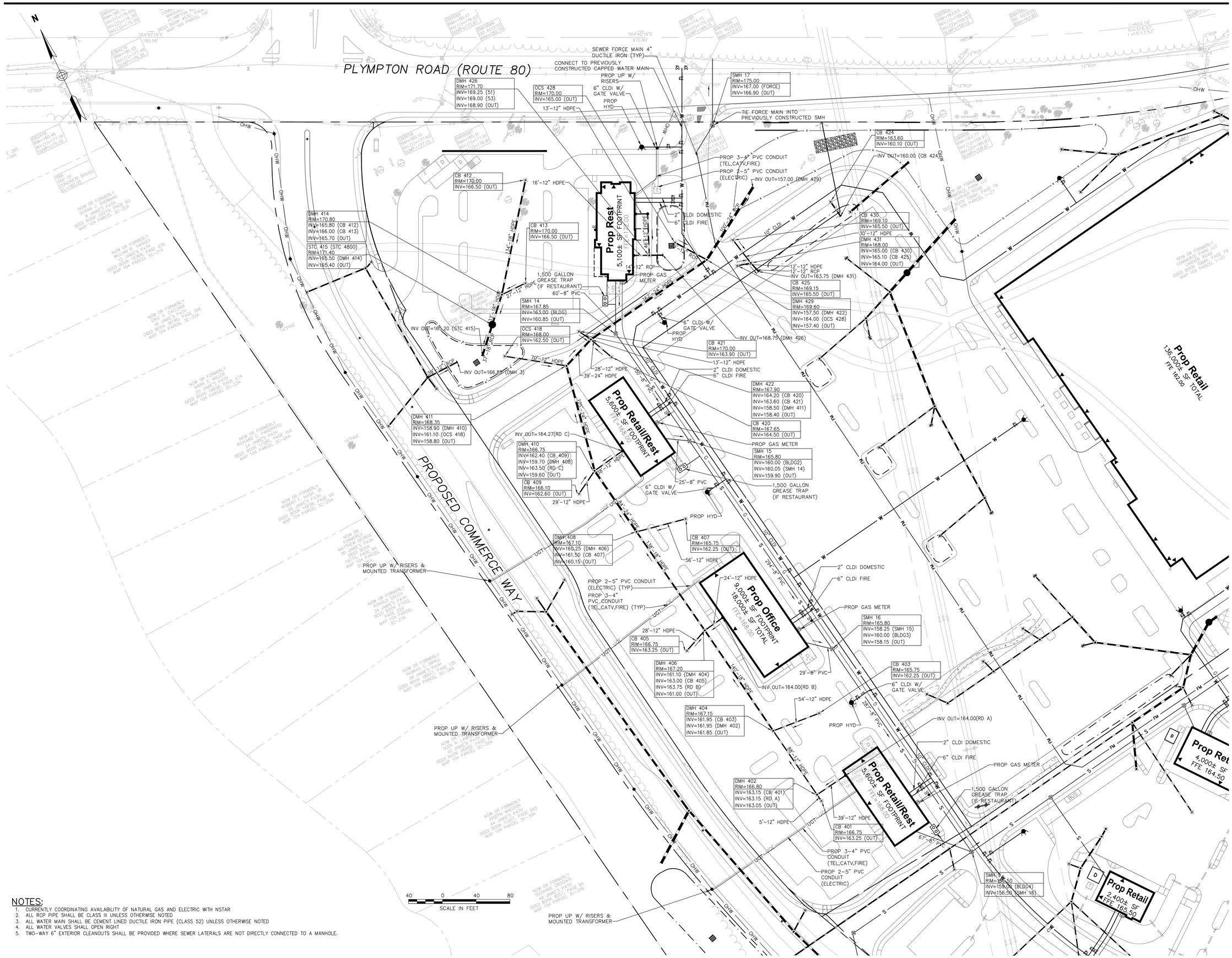

NOTES:

1. CURRENTLY COORDINATING AVAILABILITY OF NATURAL GAS AND ELECTRIC WITH NSTAR
2. ALL RCP PIPE SHALL BE CLASS III UNLESS OTHERWISE NOTED
3. ALL WATER MAIN SHALL BE CEMENT LINED DUCTILE IRON PIPE (CLASS 52) UNLESS OTHERWISE NOTED
4. ALL WATER VALVES SHALL OPEN RIGHT
5. TWO-WAY 6" EXTERIOR CLEANOUTS SHALL BE PROVIDED WHERE SEWER LATERALS ARE NOT DIRECTLY CONNECTED TO A MANHOLE.

TEC

TEC, Inc.

65 Glenn Street
Lawrence, MA 01843
t: (978) 794-1792

169 Ocean Boulevard
Unit 101, PO Box 249
Hampton, NH 03842
t: (603) 601-8154

www.TheEngineeringCorp.com

DESIGNED BY	RJF
DRAWN BY	PFE
CHECKED BY	KRD
DATE	1/20/2015
SCALE	1"=40'

PREPARED FOR

High Rock Cranberry Crescent, LLC
Suite 2-400
275 Grove Street
Newton, MA 02466

REVISIONS

ISSUED FOR

Construction

PROJECT TITLE

Cranberry Crescent Development

PROJECT LOCATION

Plymouth, Massachusetts

DRAWING TITLE

Lot 4 – Utility Plan

COMMONWEALTH OF MASSACHUSETTS
RICHARD J. FRIBERG JR.
CIVIL
No. 47850
REGISTERED PROFESSIONAL ENGINEER
1/20/15

PROJECT NO. T0372

TEC CAD FILE T0372_UT_LOT4.dwg

DRAWING NO. C-15

SHEET 15 OF 30

ZONING TABLE		
ZONING DISTRICT	GENERAL COMMERCIAL (GC)	
PROPOSED USE	AS ALLOWED IN CONDITION NO. 16	
PROPOSED USE ALLOWABLE BY	PREVIOUSLY ISSUED SPECIAL PERMIT (CASE NO. 2946 – DECEMBER 1999)	
DIMENSIONAL REQUIREMENTS	REQUIRED	PROVIDED
LOT AREA	20,000 SF (MIN)	2.4 AC
LOT FRONTAGE/WIDTH	90 FT (MIN)	275 FT
LOT DEPTH	460 FT (MIN)	573 FT
FRONT YARD SETBACK	40 FT (MIN)	146 FT
REAR YARD SETBACK	30 FT (MIN)	321 FT
SIDE YARD SETBACK	10 FT (MIN)*	31 FT
BUFFER WIDTH (FROM PUBLIC WAY)	10 FT (MIN)	15 FT
OPEN SPACE	N/A	48%
MAXIMUM BUILDING HEIGHT	35 FT	20 FT
MAXIMUM STORIES	3 STORIES	1 STORY
MAX BUILDING COVERAGE / FAR	50% / 1.0	6.5% / 0.065
PYLON SIGN SIZE (SF)	N/A	TBD

* 0 FT SIDE YARD SETBACK ALLOWABLE BY SPECIAL PERMIT IN THE GC DISTRICT.

PARKING TABLE		
REQUIRED PARKING	RETAIL (6,800 GSF) 1 SPACE/200 SF x 6,800 SF = 34 SPACES	
PROPOSED PARKING	37 SPACES (5.4 SPACES/KSF)	
REQUIRED ACCESSIBLE PARKING	SPACES PROVIDED (37 SPACES) ADA REQ. (26–50 SPACES) = 2 ACCESSIBLE SPACES	
PROPOSED ACCESSIBLE PARKING	2 SPACES	
DIMENSIONAL REQUIREMENTS	REQUIRED	PROVIDED
PARKING SPACE DIMENSIONS	10 FT x 18 FT	10 FT x 18 FT
AISLE WIDTH (TWO WAY)	25 FT	25 FT

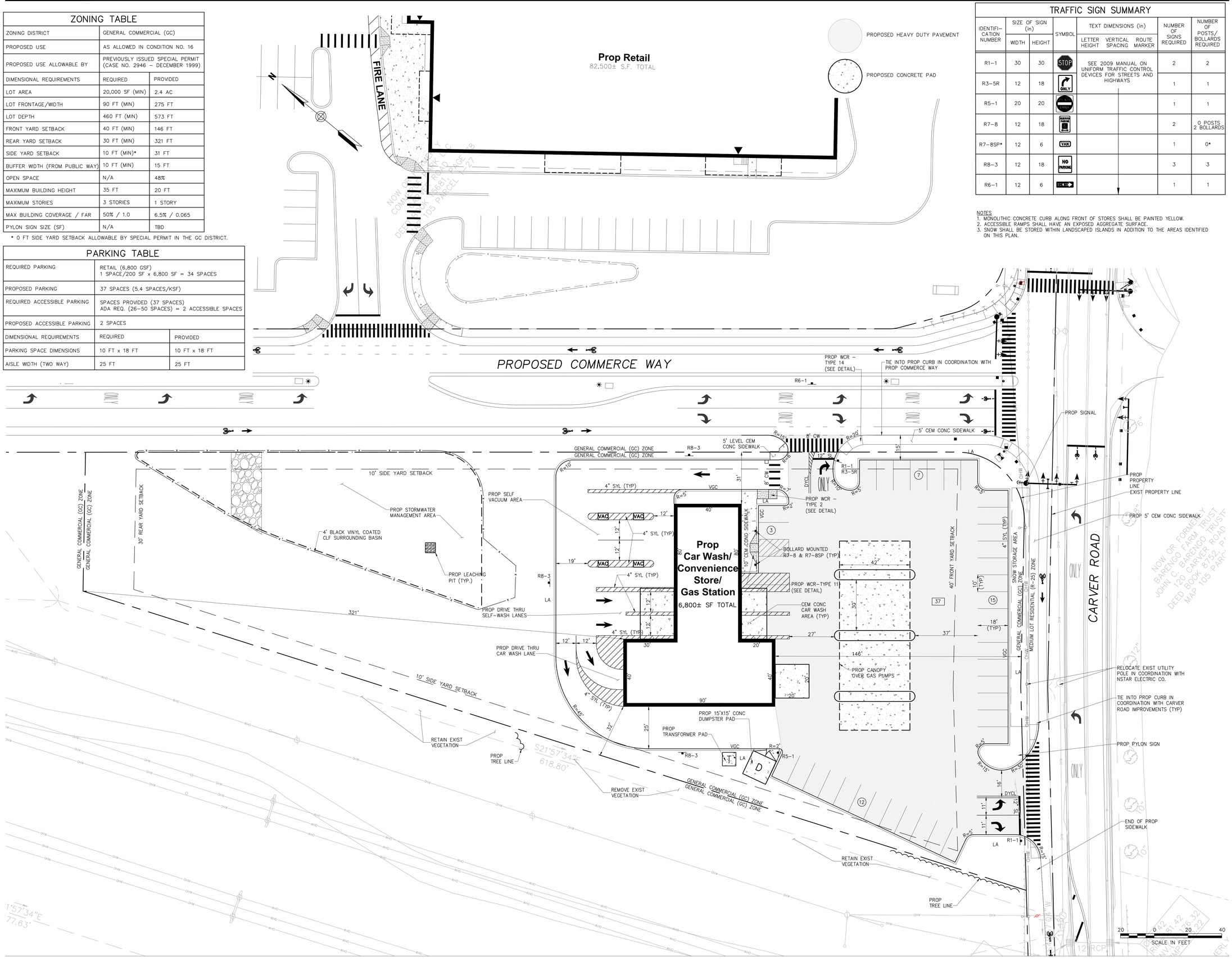

TRAFFIC SIGN SUMMARY							
IDENTIFI–CATION NUMBER	SIZE OF SIGN (in)		SYMBOL	TEXT DIMENSIONS (in)		NUMBER OF SIGNS REQUIRED	NUMBER OF POSTS/ BOLLARDS REQUIRED
	WIDTH	HEIGHT		LETTER HEIGHT	VERTICAL SPACING / ROUTE MARKER		
R1–1	30	30	STOP	SEE 2009 MANUAL ON UNIFORM TRAFFIC CONTROL DEVICES FOR STREETS AND HIGHWAYS		2	2
R3–5R	12	18	ONLY			1	1
R5–1	20	20	DO NOT ENTER			1	1
R7–8	12	18	HANDICAPPED PARKING			2	0 POSTS 2 BOLLARDS
R7–8SP*	12	6	VAN			1	0*
R8–3	12	18	NO PARKING			3	3
R6–1	12	6	SCHOOL			1	1

NOTES
1. MONOLITHIC CONCRETE CURB ALONG FRONT OF STORES SHALL BE PAINTED YELLOW.
2. ACCESSIBLE RAMPS SHALL HAVE AN EXPOSED AGGREGATE SURFACE.
3. SNOW SHALL BE STORED WITHIN LANDSCAPED ISLANDS IN ADDITION TO THE AREAS IDENTIFIED ON THIS PLAN.

TEC, Inc.

65 Glenn Street
Lawrence, MA 01843
t: (978) 794-1792

169 Ocean Boulevard
Unit 101, PO Box 249
Hampton, NH 03842
t: (603) 601-8154

www.TheEngineeringCorp.com

DESIGNED BY	RJF
DRAWN BY	PFE
CHECKED BY	KRD
DATE	1/20/2015
SCALE	1"=20'

PREPARED FOR

High Rock Cranberry Crescent, LLC
Suite 2–400
275 Grove Street
Newton, MA 02466

REVISIONS

ISSUED FOR

Construction

PROJECT TITLE

Cranberry Crescent Development

PROJECT LOCATION

Plymouth, Massachusetts

DRAWING TITLE

Lot 5 – Layout & Materials Plan

COMMONWEALTH OF MASSACHUSETTS
RICHARD J. FRIBERG JR.
CIVIL
No. 47850
REGISTERED PROFESSIONAL ENGINEER
1/20/15

PROJECT NO. T0372

TEC CAD FILE T0372_LM_LOT5.dwg

DRAWING NO. C–16

SHEET 16 OF 30

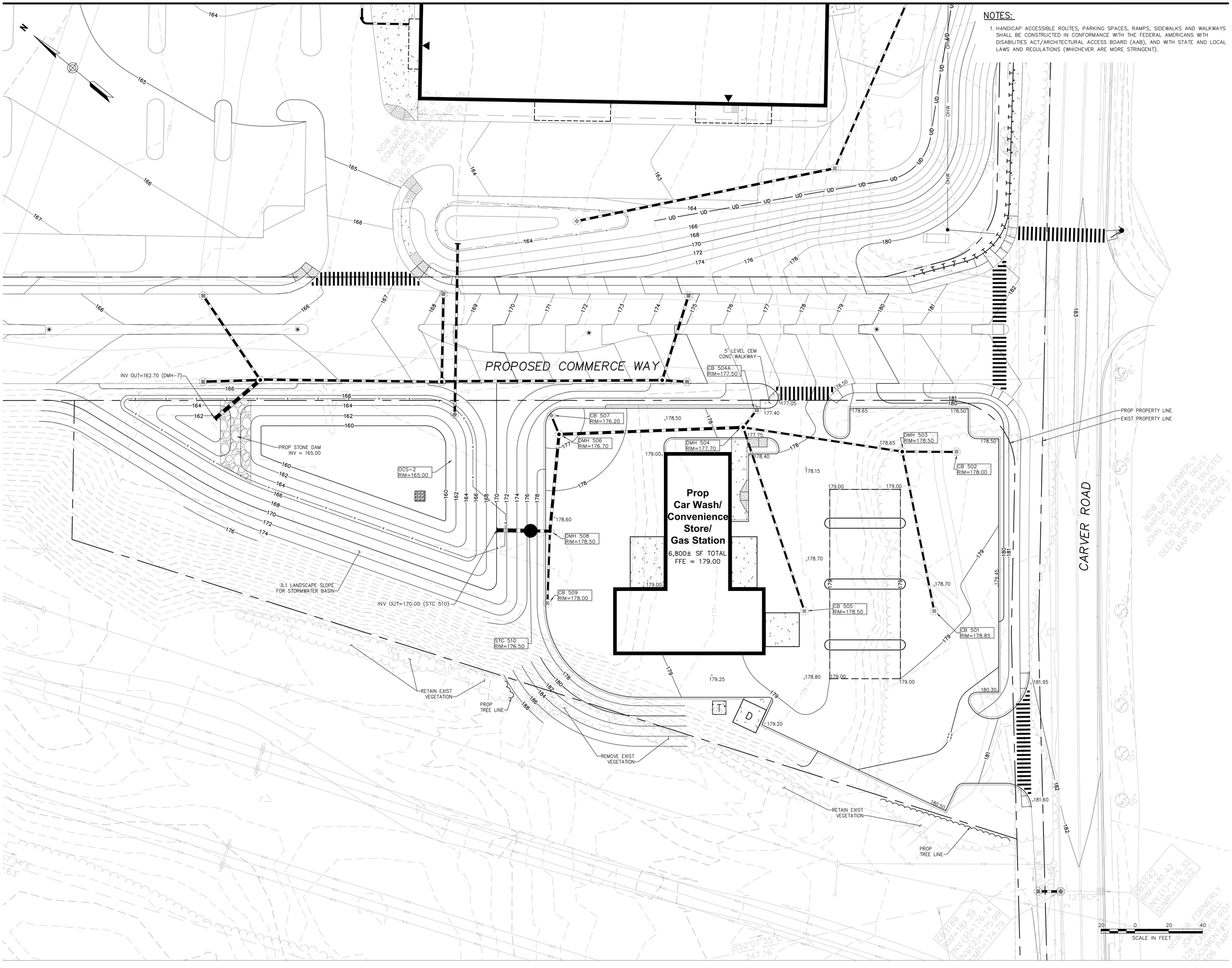

NOTES:

1. HANDICAP ACCESSIBLE ROUTES, PARKING SPACES, RAMPS, SIDEWALKS AND WALKWAYS SHALL BE CONSTRUCTED IN CONFORMANCE WITH THE FEDERAL AMERICANS WITH DISABILITIES ACT/ARCHITECTURAL ACCESS BOARD (AAB), AND WITH STATE AND LOCAL LAWS AND REGULATIONS (WHICHEVER ARE MORE STRINGENT).

TEC

TEC, Inc.

65 Glenn Street
Lawrence, MA 01843
t: (978) 794-1792

169 Ocean Boulevard
Unit 101, PO Box 249
Hampton, NH 03842
t: (603) 601-8154

www.TheEngineeringCorp.com

DESIGNED BY	RJF
DRAWN BY	PFE
CHECKED BY	KRD
DATE	1/20/2015
SCALE	1"=20'

PREPARED FOR

High Rock Cranberry Crescent, LLC
Suite 2-400
275 Grove Street
Newton, MA 02466

REVISIONS

ISSUED FOR

Construction

PROJECT TITLE

Cranberry Crescent Development

PROJECT LOCATION

Plymouth, Massachusetts

DRAWING TITLE

Lot 5 – Grading & Drainage Plan

COMMONWEALTH OF MASSACHUSETTS
RICHARD J. FRIBERG JR.
CIVIL
No. 47850
REGISTERED PROFESSIONAL ENGINEER
1/20/15

PROJECT NO. T0372

TEC CAD FILE T0372_GD_LOT5.dwg

DRAWING NO. C-17

SHEET 17 OF 30

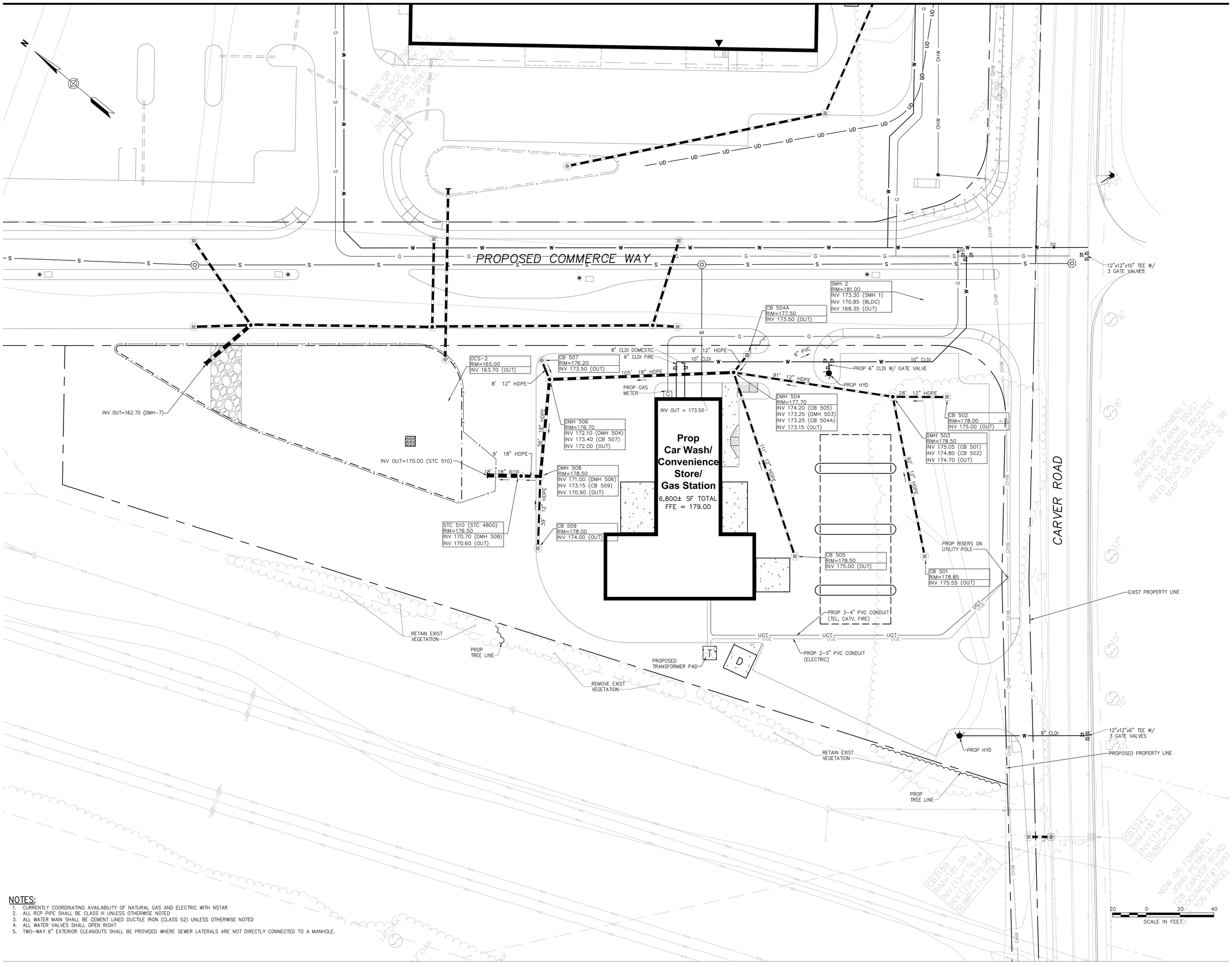

NOTES:

1. CURRENTLY COORDINATING AVAILABILITY OF NATURAL GAS AND ELECTRIC WITH NSTAR
2. ALL RCP PIPE SHALL BE CLASS III UNLESS OTHERWISE NOTED
3. ALL WATER MAIN SHALL BE CEMENT LINED DUCTILE IRON (CLASS 52) UNLESS OTHERWISE NOTED
4. ALL WATER VALVES SHALL OPEN RIGHT
5. TWO-WAY 6" EXTERIOR CLEANOUTS SHALL BE PROVIDED WHERE SEWER LATERALS ARE NOT DIRECTLY CONNECTED TO A MANHOLE.

TEC

TEC, Inc.

65 Glenn Street
Lawrence, MA 01843
t: (978) 794-1792

169 Ocean Boulevard
Unit 101, PO Box 249
Hampton, NH 03842
t: (603) 601-8154

www.TheEngineeringCorp.com

DESIGNED BY	RJF
DRAWN BY	PFE
CHECKED BY	KRD
DATE	1/20/2015
SCALE	1"=20'

PREPARED FOR

High Rock Cranberry Crescent, LLC
Suite 2-400
275 Grove Street
Newton, MA 02466

REVISIONS

ISSUED FOR

Construction

PROJECT TITLE

Cranberry Crescent Development

PROJECT LOCATION

Plymouth, Massachusetts

DRAWING TITLE

Lot 5 - Utility Plan

COMMONWEALTH OF MASSACHUSETTS
RICHARD J. FRIBERG JR.
CIVIL
No. 47850
REGISTERED PROFESSIONAL ENGINEER
1/20/15

PROJECT NO. T0372

TEC CAD FILE T0372_UT_LOT5.dwg

DRAWING NO. C-18

SHEET 18 OF 30

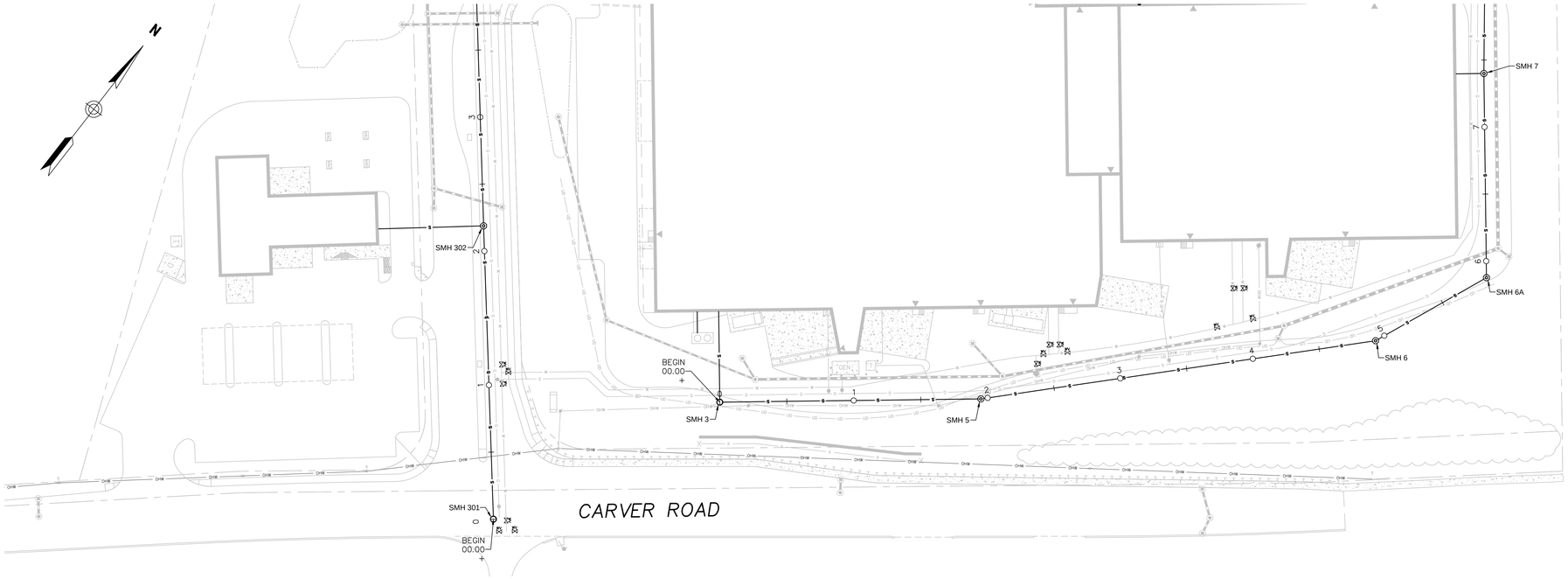

LOT 2 SEWER MAIN A PLAN VIEW

LOT 2 SEWER MAIN A PROFILE VIEW

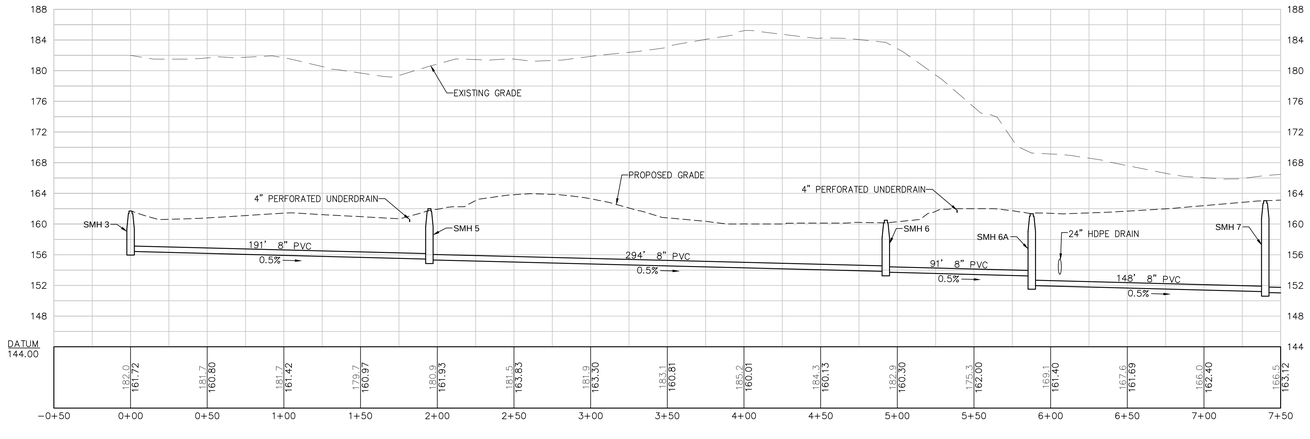

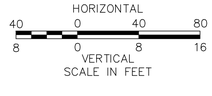

TEC, Inc.

65 Glenn Street
Lawrence, MA 01843
t: (978) 794-1792

169 Ocean Boulevard
Unit 101, PO Box 249
Hampton, NH 03842
t: (603) 601-8154

www.TheEngineeringCorp.com

DESIGNED BY	RJF
DRAWN BY	PFE
CHECKED BY	KRD
DATE	1/20/2015
SCALE	AS NOTED

PREPARED FOR

High Rock Cranberry Crescent, LLC
Suite 2-400
275 Grove Street
Newton, MA 02466

REVISIONS

ISSUED FOR

Construction

PROJECT TITLE

Cranberry Crescent Development

PROJECT LOCATION

Plymouth, Massachusetts

DRAWING TITLE

Sewer Plan & Profile 1

COMMONWEALTH OF MASSACHUSETTS
RICHARD J. FRIBERG JR.
CIVIL
No. 47650
REGISTERED PROFESSIONAL ENGINEER
1/20/15

PROJECT NO.
T0372

TEC CAD FILE
T0372_SEWER.dwg

DRAWING NO.
C-19

SHEET 19 OF 30

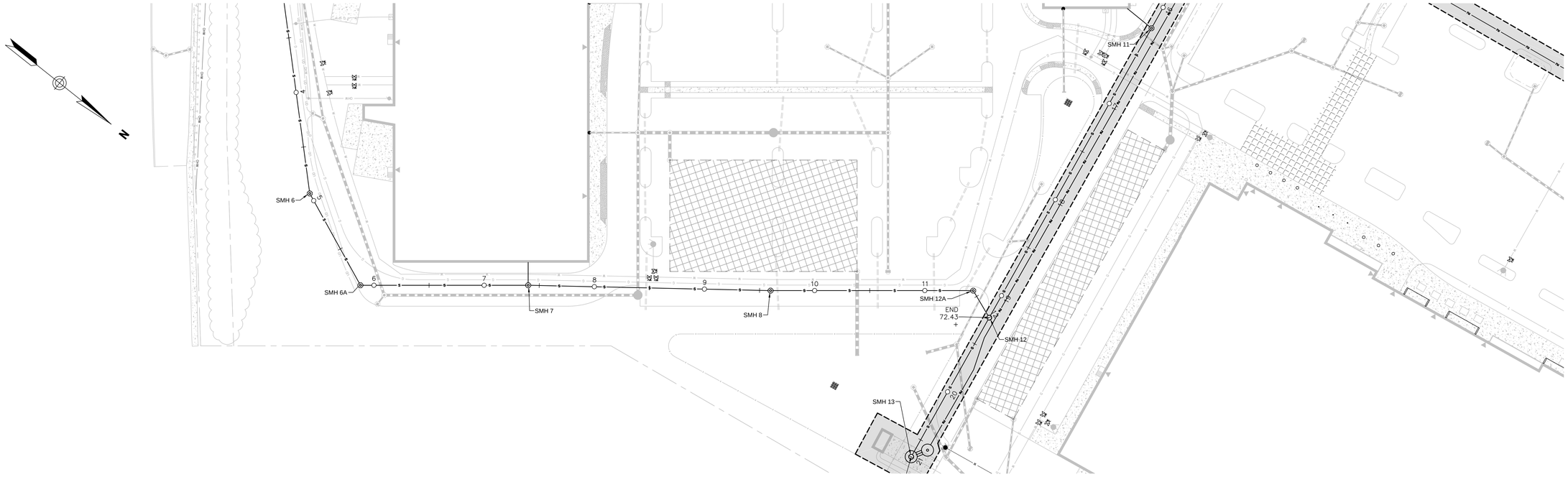

LOT 2 SEWER MAIN A PLAN VIEW

LOT 2 SEWER MAIN A PROFILE VIEW

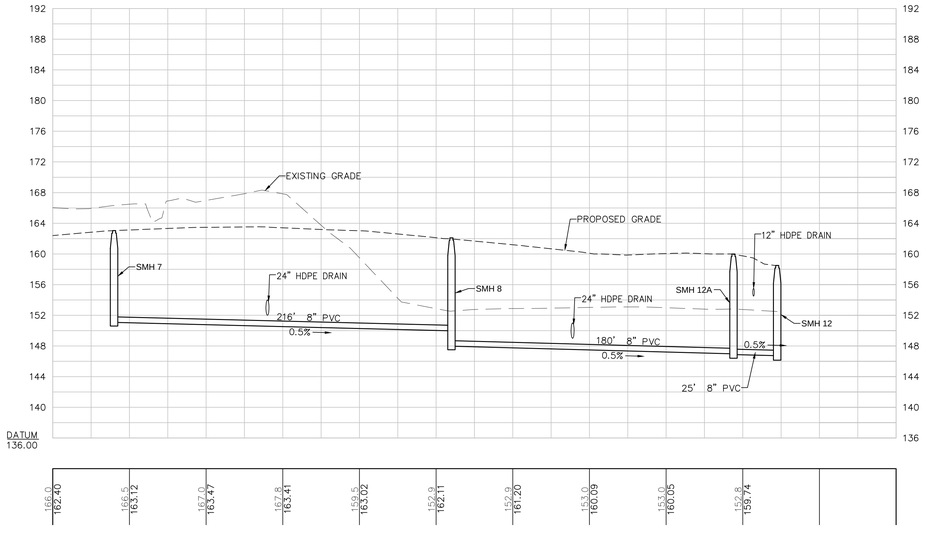

HORIZONTAL
40 0 40 80
8 0 8 16
VERTICAL
SCALE IN FEET

TEC, Inc.

65 Glenn Street
Lawrence, MA 01843
t: (978) 794-1792

169 Ocean Boulevard
Unit 101, PO Box 249
Hampton, NH 03842
t: (603) 601-8154

www.TheEngineeringCorp.com

DESIGNED BY	RJF
DRAWN BY	PFE
CHECKED BY	KRD
DATE	1/20/2015
SCALE	AS NOTED

PREPARED FOR

High Rock Cranberry Crescent, LLC
Suite 2-400
275 Grove Street
Newton, MA 02466

REVISIONS

ISSUED FOR

Construction

PROJECT TITLE

Cranberry Crescent Development

PROJECT LOCATION

Plymouth, Massachusetts

DRAWING TITLE

Sewer Plan & Profile 2

COMMONWEALTH OF MASSACHUSETTS
RICHARD J. FRIBERG JR.
CIVIL
No. 47850
REGISTERED PROFESSIONAL ENGINEER
1/20/15

PROJECT NO.
T0372

TEC CAD FILE
T0372_SEWER.dwg

DRAWING NO.
C-20

SHEET 20 OF 30

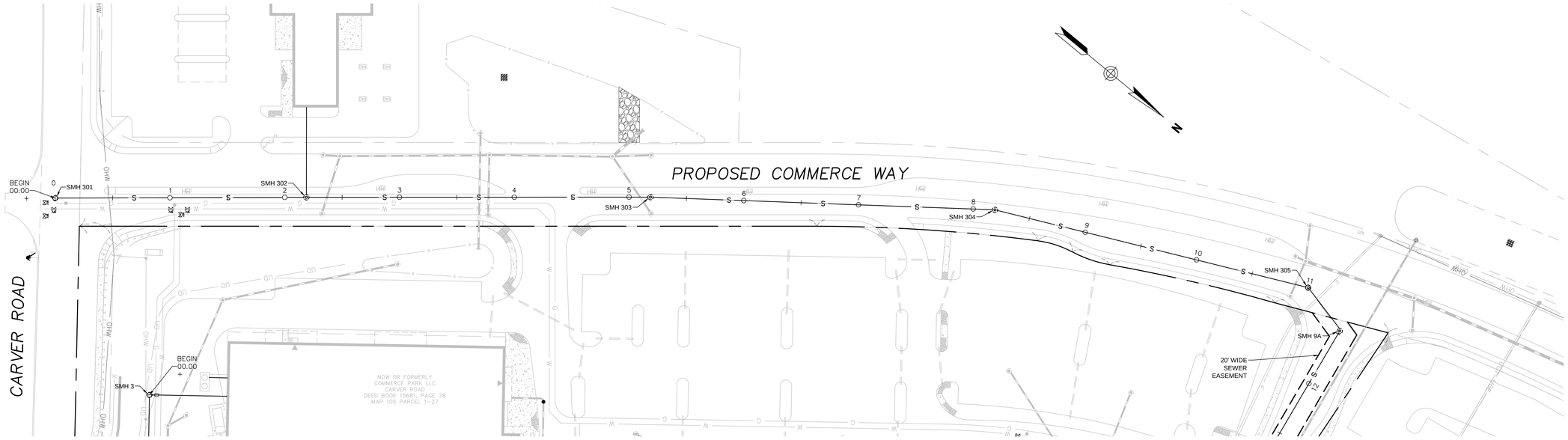

LOT 2 SEWER MAIN B PLAN VIEW

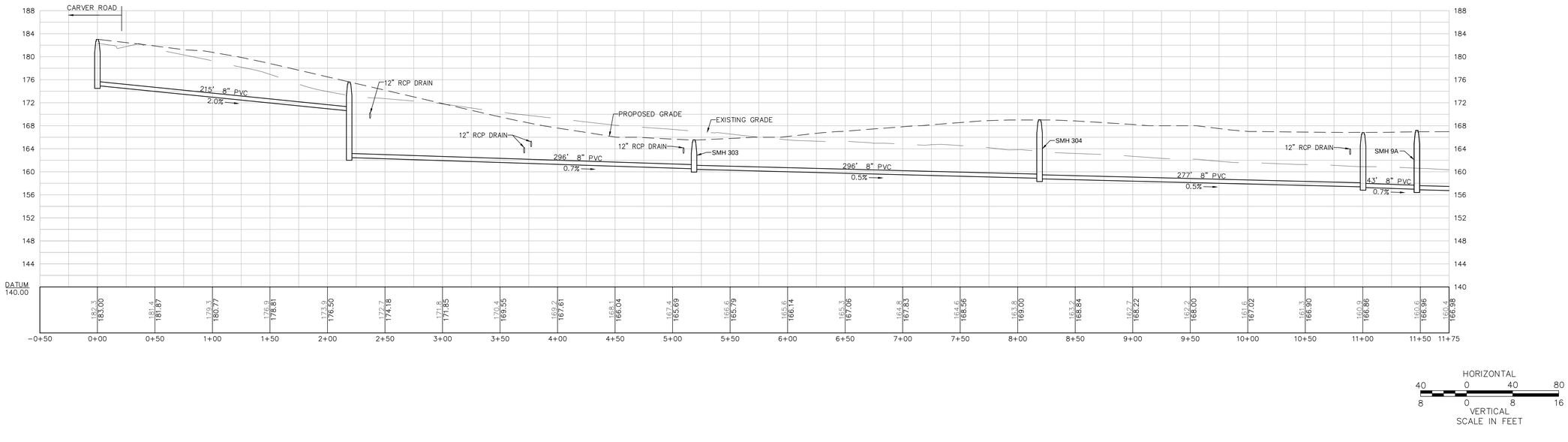

LOT 2 SEWER MAIN B PROFILE VIEW

TEC, Inc.

65 Glenn Street
Lawrence, MA 01843
t: (978) 794-1792

169 Ocean Boulevard
Unit 101, PO Box 249
Hampton, NH 03842
t: (603) 601-8154

www.TheEngineeringCorp.com

DESIGNED BY	RJF
DRAWN BY	PFE
CHECKED BY	KRD
DATE	1/20/2015
SCALE	AS NOTED

PREPARED FOR

High Rock Cranberry Crescent, LLC
Suite 2-400
275 Grove Street
Newton, MA 02466

REVISIONS

ISSUED FOR

Construction

PROJECT TITLE

Cranberry Crescent Development

PROJECT LOCATION

Plymouth, Massachusetts

DRAWING TITLE

Sewer Plan & Profile 3

COMMONWEALTH OF MASSACHUSETTS
RICHARD J. FRIBERG JR.
CIVIL
No. 47850
REGISTERED PROFESSIONAL ENGINEER
1/20/15

PROJECT NO. T0372

TEC CAD FILE T0372_SEWER.dwg

DRAWING NO. C-21

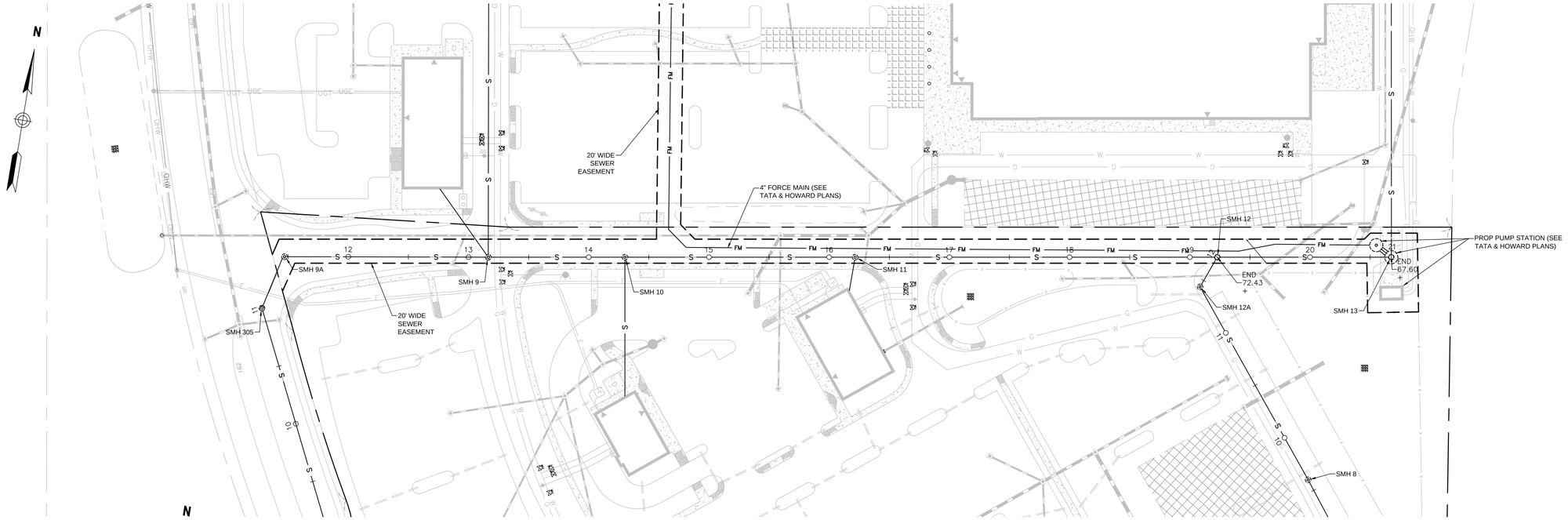

LOT 2 SEWER MAIN B PLAN VIEW

LOT 2 SEWER MAIN B PROFILE VIEW

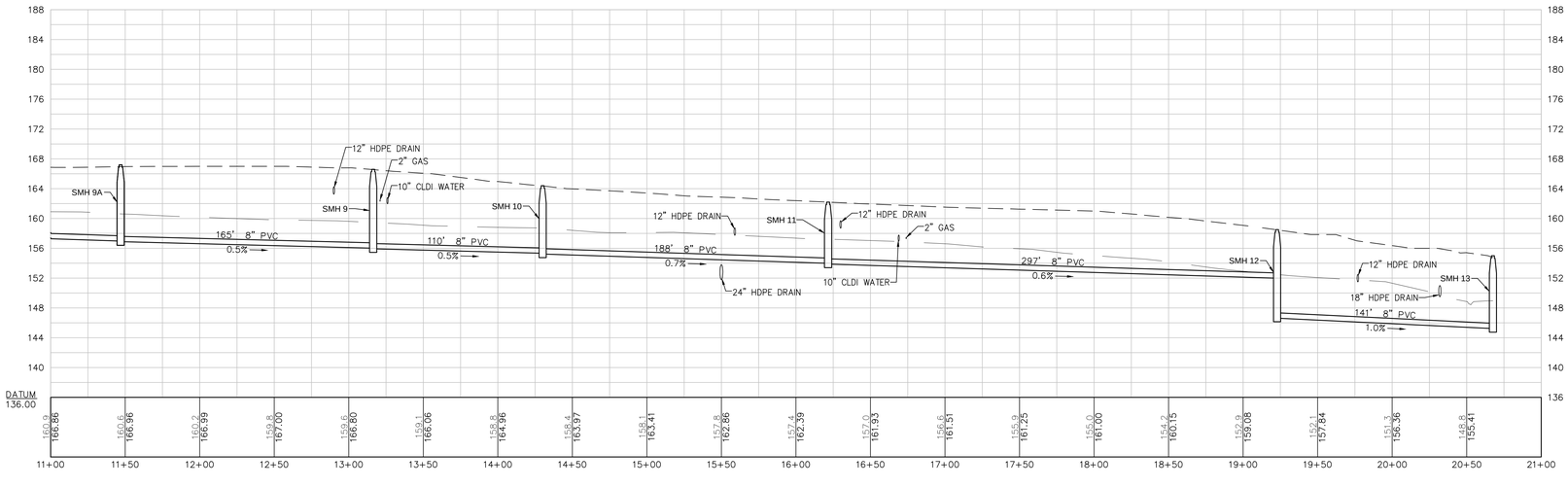

HORIZONTAL
40 0 40 80
8 0 8 16
VERTICAL
SCALE IN FEET

TEC

TEC, Inc.

65 Glenn Street
Lawrence, MA 01843
t: (978) 794-1792

169 Ocean Boulevard
Unit 101, PO Box 249
Hampton, NH 03842
t: (603) 601-8154

www.TheEngineeringCorp.com

DESIGNED BY	RJF
DRAWN BY	PFE
CHECKED BY	KRD
DATE	1/20/2015
SCALE	AS NOTED

PREPARED FOR

High Rock Cranberry Crescent, LLC
Suite 2-400
275 Grove Street
Newton, MA 02466

REVISIONS

ISSUED FOR

Construction

PROJECT TITLE

Cranberry Crescent Development

PROJECT LOCATION

Plymouth, Massachusetts

DRAWING TITLE

Sewer Plan & Profile 4

COMMONWEALTH OF MASSACHUSETTS
RICHARD J. FRIBERG JR.
CIVIL
No. 47850
REGISTERED PROFESSIONAL ENGINEER
1/20/15

PROJECT NO. T0372

TEC CAD FILE T0372_SEWER.dwg

DRAWING NO. C-22

SHEET 22 OF 30

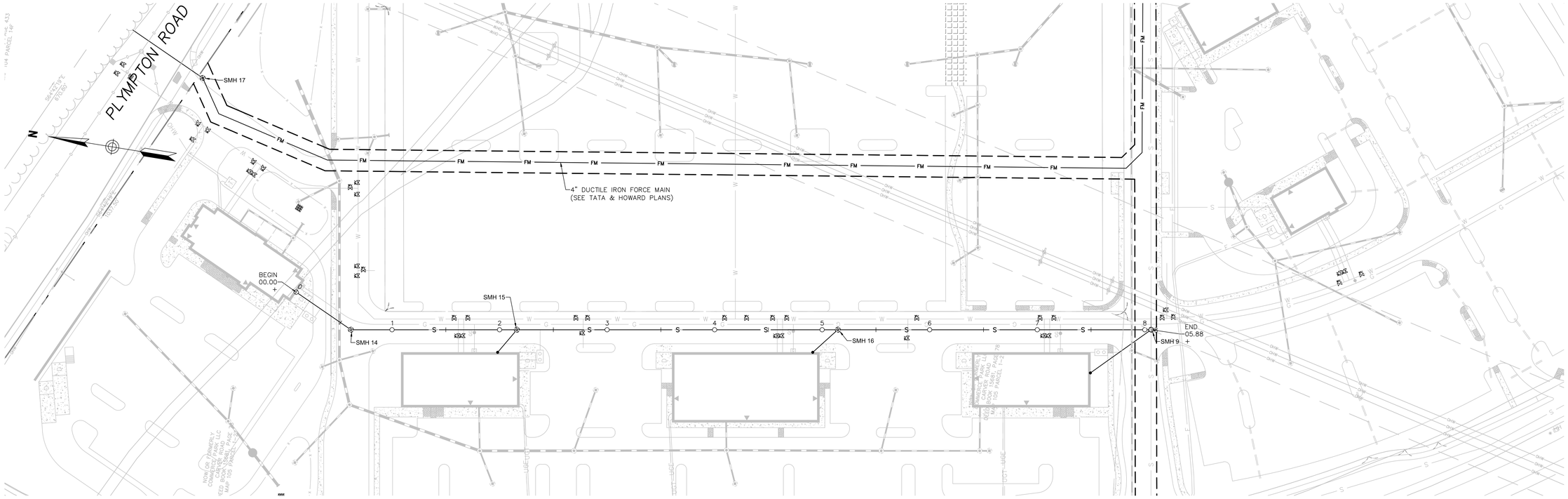

LOT 4 SEWER MAIN PLAN VIEW

LOT 4 SEWER MAIN PROFILE VIEW

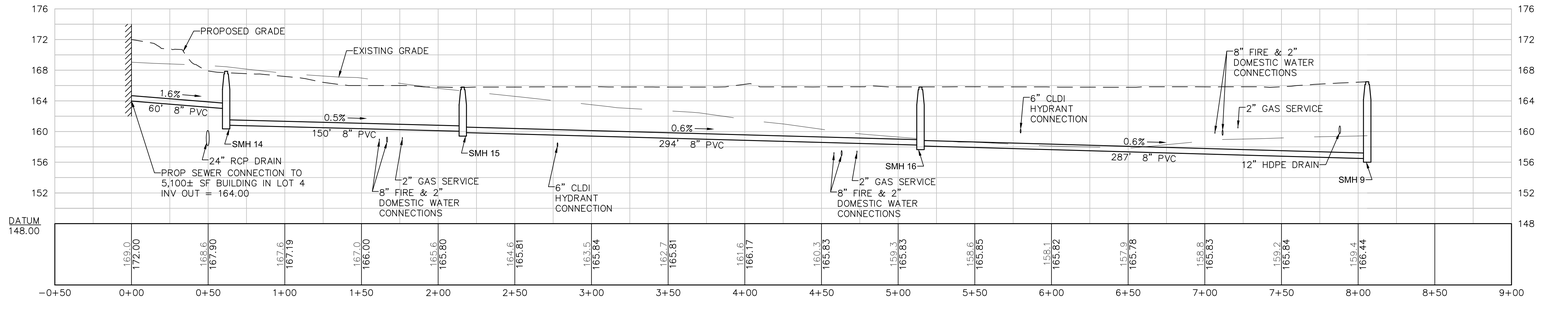

HORIZONTAL
40 0 40 80
8 0 8 16
VERTICAL
SCALE IN FEET

TEC

TEC, Inc.

65 Glenn Street
Lawrence, MA 01843
t: (978) 794-1792

169 Ocean Boulevard
Unit 101, PO Box 249
Hampton, NH 03842
t: (603) 601-8154

www.TheEngineeringCorp.com

DESIGNED BY	RJF
DRAWN BY	PFE
CHECKED BY	KRD
DATE	1/20/2015
SCALE	AS NOTED

PREPARED FOR

High Rock Cranberry Crescent, LLC
Suite 2-400
275 Grove Street
Newton, MA 02466

REVISIONS

ISSUED FOR

Construction

PROJECT TITLE

Cranberry Crescent Development

PROJECT LOCATION

Plymouth, Massachusetts

DRAWING TITLE

Sewer Plan & Profile 5

COMMONWEALTH OF MASSACHUSETTS
RICHARD J. FRIBERG JR.
CIVIL
No. 47850
REGISTERED PROFESSIONAL ENGINEER
1/20/15

PROJECT NO.
T0372

TEC CAD FILE
T0372_SEWER.dwg

DRAWING NO.
C-23

SHEET 23 OF 30

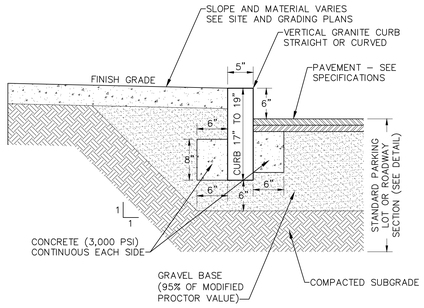

VERTICAL GRANITE CURB

N.T.S.

NOTES:
1. PROVIDE EXPANSION JOINTS AT MIN. 20 FT. O.C. WITH PRE–FORMED EXPANSION JOINT FILLER & SEALER.
2. PROVIDE TOOLED CONTROL JOINTS AT 5' O.C.
3. PROVIDE BROOM FINISH IN DIRECTION PERPENDICULAR TO FOOT TRAFFIC (CURB).
4. CEMENT CONCRETE SHALL BE 4,000 PSI–TYPE II.

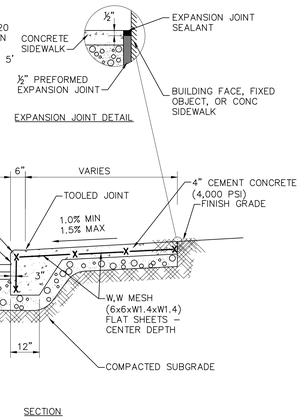

MONOLITHIC CONCRETE CURB

N.T.S.

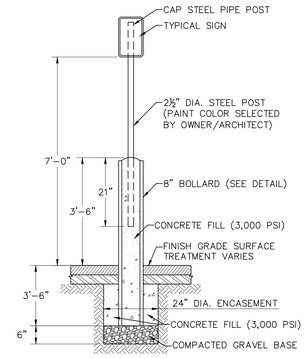

BOLLARD MOUNTED SIGN

N.T.S.

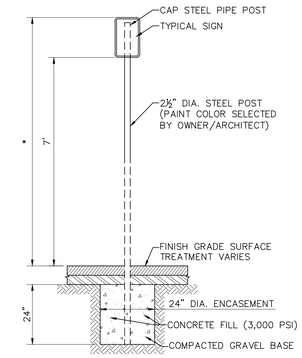

*THIS DIMENSION SHALL BE A MINIMUM OF 5' AND A MAXIMUM OF 8' FOR ACCESSIBLE SIGNAGE IN THE COMMONWEALTH OF MASSACHUSETTS.

SIGN POST

N.T.S.

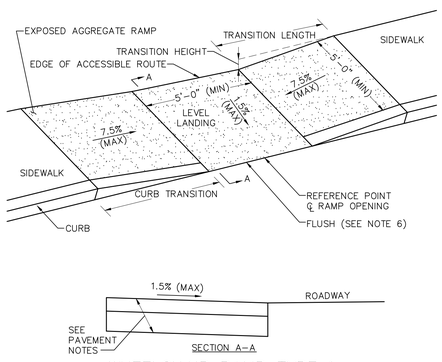

WHEELCHAIR RAMP TYPE 1

N.T.S.

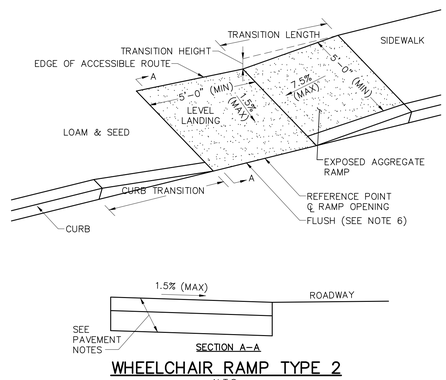

WHEELCHAIR RAMP TYPE 2

N.T.S.

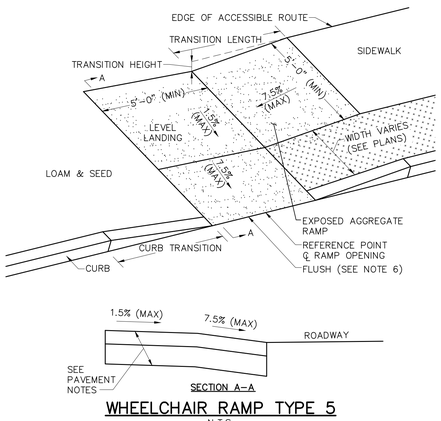

WHEELCHAIR RAMP TYPE 5

N.T.S.

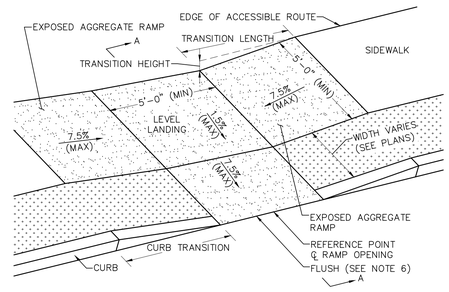

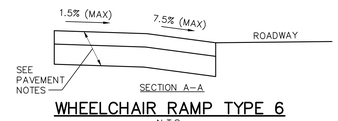

WHEELCHAIR RAMP TYPE 6

N.T.S.

WHEELCHAIR RAMP NOTES (FOR ALL WCR TYPES):

1. MAXIMUM ALLOWABLE SLOPE OF ACCESSIBLE ROUTE EXCLUDING CURB RAMPS SHALL BE DESIGNED TO 4.5% ±0.5% (7.5% ±0.5% FOR CURB RAMPS).
2. A MINIMUM OF 3'–3" CLEAR SHALL BE MAINTAINED AT ANY PERMANENT OBSTACLE IN ACCESSIBLE ROUTE (I.E., HYDRANTS, UTILITY POLES, TREE WELLS, SIGNS, ETC.).
3. CURB TREATMENT VARIES, SEE PLANS FOR CURB TYPE.
4. RAMP, CURB AND ADJACENT PAVEMENTS SHALL BE GRADED TO PREVENT PONDING.
5. WHERE ACCESSIBLE ROUTES ARE LESS THAN 5' IN WIDTH (EXCLUDING CURBING) A 5'x5' PASSING AREA SHALL BE PROVIDED AT INTERVALS NOT TO EXCEED 200 FT.
6. ELIMINATE CURBING AT RAMP WHERE IT ABUTS ROADWAY.
7. WHEELCHAIR RAMP SLOPES AND CROSS SLOPES SHALL HAVE A CONSTRUCTION TOLERANCE OF ±0.5%.
8. ALL RAMPS SHALL HAVE AN EXPOSED AGGREGATE FINISH.

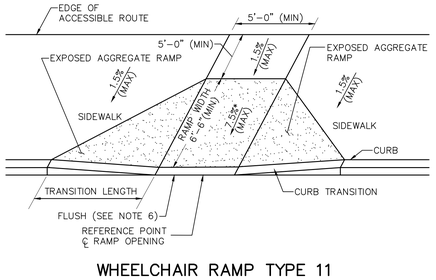

WHEELCHAIR RAMP TYPE 11

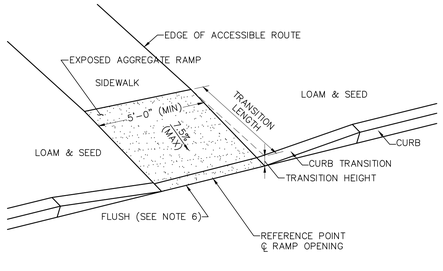

WHEELCHAIR RAMP TYPE 12

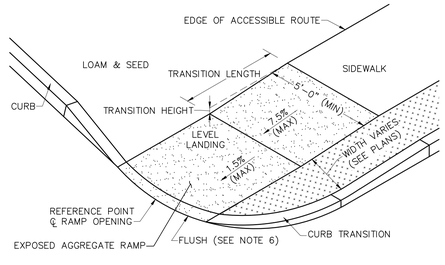

WHEELCHAIR RAMP TYPE 13

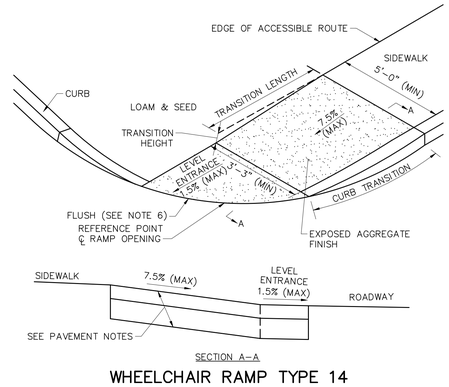

WHEELCHAIR RAMP TYPE 14

TEC

TEC, Inc.

65 Glenn Street
Lawrence, MA 01843
t: (978) 794-1792

169 Ocean Boulevard
Unit 101, PO Box 249
Hampton, NH 03842
t: (603) 601-8154

www.TheEngineeringCorp.com

DESIGNED BY	RJF
DRAWN BY	PFE
CHECKED BY	KRD
DATE	1/20/2015
SCALE	AS NOTED

PREPARED FOR

High Rock Cranberry Crescent, LLC
Suite 2–400
275 Grove Street
Newton, MA 02466

REVISIONS

ISSUED FOR

Construction

PROJECT TITLE

Cranberry Crescent Development

PROJECT LOCATION

Plymouth, Massachusetts

DRAWING TITLE

General Site Construction Details

COMMONWEALTH OF MASSACHUSETTS
RICHARD J. FRIBERG JR.
CIVIL
No. 47850
REGISTERED PROFESSIONAL ENGINEER
1/20/15

PROJECT NO. T0372

TEC CAD FILE T0372_DET.dwg

DRAWING NO. C–24

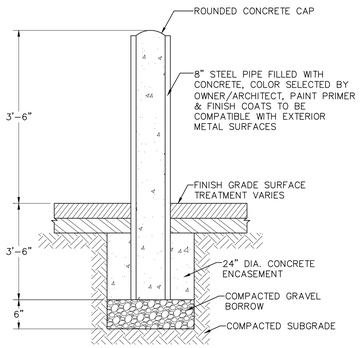

NOTES:
1. BOLLARDS SHALL BE PLACED IN ACCORDANCE WITH THE ADA ACCESSABILITY GUIDELINES. A MINIMUM CLEAR WIDTH OF 36" SHALL BE PROVIDED TO MAINTAIN AN ACCESSIBLE PATH.
2. BOLLARDS SHALL BE INSTALLED TO PROTECT ALL SERVICE CONNECTIONS, METERS, AND REAR BUILDING CORNERS IN PROPOSED AREAS.

BOLLARD
N.T.S.

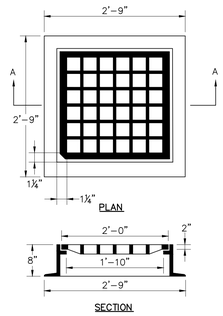

NOTES:
1. FRAME AND GRATE SHALL BE RATED FOR HS-20 LOADING.
2. USE 3 FLANGE FRAMES AT CURB INLET.
3. MIN FRAME WEIGHT:
   4 FLANGE – 295 LB
   3 FLANGE – 264 LB
4. ALL CB FRAME AND GRATES SHALL BE ADA AND AAB COMPLIANT.
5. CATCH BASIN FRAME & GRATE SHALL BE EAST IRON JORDAN WORKS 5546Z/5520M5.

CATCH BASIN FRAME & GRATE
N.T.S.

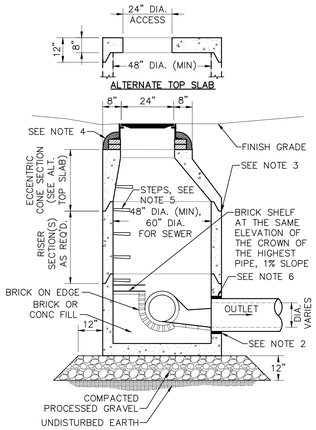

NOTES:
1. ALL SECTIONS SHALL BE DESIGNED FOR HS-20 LOADING.
2. PROVIDE "V" KNOCKOUTS FOR PIPES WITH 2" MAX CLEARANCE TO OUTSIDE OF PIPE. MORTAR ALL PIPE CONNECTIONS.
3. RUBBER "O"-RING GASKET OR PREFORMED FLEXIBLE JOINT SEALANT PER ASTM C-443 AND FED SPEC SS-S-210A.
4. DRAIN MANHOLE FRAME AND COVER SHALL BE SET IN FULL MORTAR BED. ADJUST TO GRADE WITH CLAY BRICK AND MORTAR. (2 COURSES TYP 5 COURSES MAX)
5. ALUMINUM STEPS 6061 T-6 EMBEDDED PORTION COATED WITH BITUMASTIC – 12" OC OR COPOLYMER POLYPROPYLENE (STEEL) STEPS PER ASTM A-815 (FOR SEWER MANHOLES ONLY).
6. FOR DRAINAGE MANHOLES: HYDRAULIC CEMENT MORTAR, FOR SEWER MANHOLES: KOR-N-SEAL NEOPRENE RUBBER BOOT.
7. ALL MANHOLES SHALL CONFORM TO TOWN OF PLYMOUTH STANDARDS, IN THE EVENT OF A CONFLICT, THE TOWN STANDARD DETAILS SHALL GOVERN.
8. DRAIN MANHOLE FRAME & COVER SHALL BE EAST JORDAN IRON WORKS 2114Z/2110A.
9. SEWER MANHOLES WITH DEPTHS GREATER THAN 9 FT SHALL HAVE AN EXTENDED BASE.

DRAIN/SEWER MANHOLE
N.T.S.

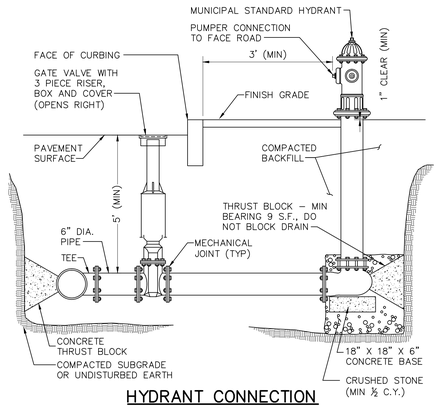

HYDRANT CONNECTION
N.T.S.

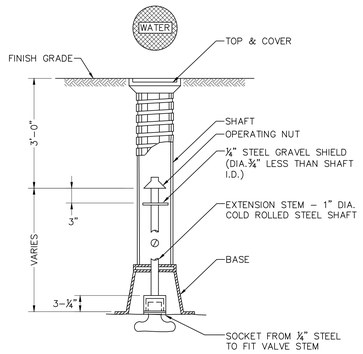

VALVE SHAFT EXTENSION
N.T.S.

BENDS		B	C	D	E	F	BENDS		B	C	D	E	F
6"	11-¼°	8"	15"	12"	24"	12"	6"	45°	8"	30"	12"	24"	14"
6"	22-½°	8"	19"	12"	24"	13"	6"	90°	8"	30"	12"	24"	27"
8"	11-¼°	8"	20"	12"	24"	12"	8"	45°	8"	30"	12"	24"	24"
8"	22-½°	8"	22"	12"	24"	17"	8"	90°	8"	38"	12"	24"	36"
12"	11-¼°	8"	30"	12"	24"	15"	12"	45°	8"	40"	12"	24"	40"
12"	22-½°	8"	35"	12"	24"	25"	12"	90°	8"	60"	12"	24"	52"

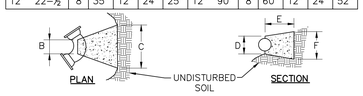

TEES	G	H	I	J	TEES	G	H	I	J
6" X 6" X 6"	12"	24"	24"	18"	12" X 12" X 6"	12"	24"	24"	18"
8" X 8" X 6"	12"	24"	24"	18"	12" X 12" X 8"	12"	24"	24"	24"
8" X 8" X 8"	12"	24"	24"	24"	12" X 12" X 12"	12"	36"	24"	36"

NOTES:
1. PROVIDE BLOCKS FOR TAPPING SLEEVES, DEAD ENDS, GATE VALVES AND VERTICAL BENDS, SAME SIZE AS REQ. FOR TEES. PROVIDE ANCHOR RODS AT VERTICAL BENDS AND GATE VALVES.
2. CONCRETE SHALL NOT BE PLACED AGAINST PIPE BEYOND FITTING.
3. CONCRETE SHALL BE 3000 PSI – TYPE 1

CONCRETE THRUST BLOCK
N.T.S.

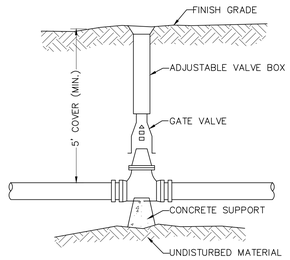

NOTE: ALL VALVES SHALL OPEN RIGHT

WATER GATE VALVE
N.T.S.

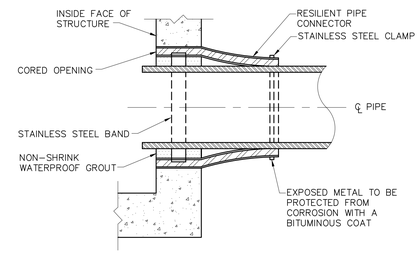

SEWER PIPE CONNECTION
N.T.S.

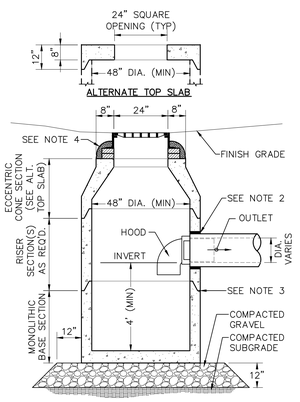

NOTES:
1. ALL SECTIONS SHALL BE DESIGNED FOR HS-20 LOADING.
2. PROVIDE "V" KNOCKOUTS FOR PIPES WITH 2" MAX CLEARANCE TO OUTSIDE OF PIPE. MORTAR ALL PIPE CONNECTIONS.
3. JOINT SEALANT BETWEEN PRECAST SECTIONS SHALL BE PREFORMED BUTYL RUBBER.
4. CATCH BASIN FRAME AND GRATE SHALL BE SET IN FULL MORTAR BED. ADJUST TO GRADE WITH CLAY BRICK AND MORTAR. (2 COURSES TYP 5 COURSES MAX)
5. CATCH BASIN FRAME AND GRATES SHALL BE EAST JORDAN IRON WORKS 5546Z/5520M5

DEEP SUMP CATCH BASIN WITH HOOD
N.T.S.

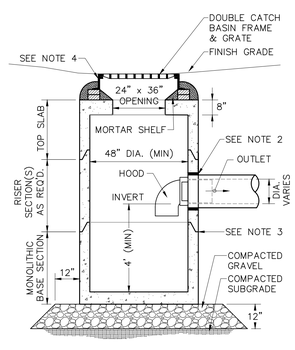

NOTES:
1. ALL SECTIONS SHALL BE DESIGNED FOR HL-93 LOADING.
2. PROVIDE "V" KNOCKOUTS FOR PIPES WITH 2" MAX CLEARANCE TO OUTSIDE OF PIPE. MORTAR ALL PIPE CONNECTIONS.
3. JOINT SEALANT BETWEEN PRECAST SECTIONS SHALL BE PREFORMED BUTYL RUBBER.
4. CATCH BASIN FRAME AND GRATE SHALL BE SET IN FULL MORTAR BED. ADJUST TO GRADE WITH CLAY BRICK AND MORTAR. (2 COURSES TYP 5 COURSES MAX)
5. DOUBLE CATCH BASIN FRAME AND GRATE SHALL BE EAST JORDAN IRON WORKS 5448Z/5520M5.

DOUBLE GRATE CATCH BASIN WITH HOOD
N.T.S.

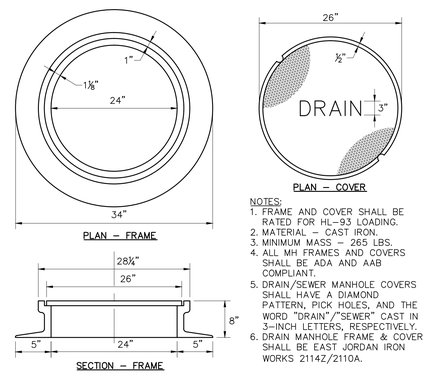

NOTES:
1. FRAME AND COVER SHALL BE RATED FOR HL-93 LOADING.
2. MATERIAL – CAST IRON.
3. MINIMUM MASS – 265 LBS.
4. ALL MH FRAMES AND COVERS SHALL BE ADA AND AAB COMPLIANT.
5. DRAIN/SEWER MANHOLE COVERS SHALL HAVE A DIAMOND PATTERN, PICK HOLES, AND THE WORD "DRAIN"/"SEWER" CAST IN 3-INCH LETTERS, RESPECTIVELY.
6. DRAIN MANHOLE FRAME & COVER SHALL BE EAST JORDAN IRON WORKS 2114Z/2110A.

MANHOLE FRAME & COVER
N.T.S.

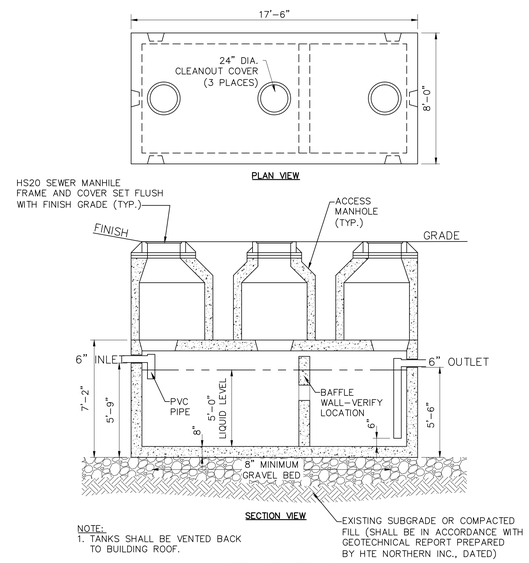

NOTE:
1. TANKS SHALL BE VENTED BACK TO BUILDING ROOF.

GREASE TRAP
4,000 GAL. 2 – COMPARTMENT TANK – N.T.S.

TEC, Inc.

65 Glenn Street
Lawrence, MA 01843
t: (978) 794-1792

169 Ocean Boulevard
Unit 101, PO Box 249
Hampton, NH 03842
t: (603) 601-8154

www.TheEngineeringCorp.com

DESIGNED BY	RJF
DRAWN BY	PFE
CHECKED BY	KRD
DATE	1/20/2015
SCALE	AS NOTED

PREPARED FOR
High Rock Cranberry Crescent, LLC
Suite 2-400
275 Grove Street
Newton, MA 02466

REVISIONS

ISSUED FOR
Construction

PROJECT TITLE
Cranberry Crescent Development

PROJECT LOCATION
Plymouth, Massachusetts

DRAWING TITLE
General Site Construction Details

COMMONWEALTH OF MASSACHUSETTS
RICHARD J. FRIBERG JR.
CIVIL
No. 47550
REGISTERED PROFESSIONAL ENGINEER
1/20/15

PROJECT NO. T0372
TEC CAD FILE T0372_DET.dwg
DRAWING NO. C-25
SHEET 25 OF 30

NOTES:
1. PROVIDE EXPANSION JOINTS AT 30' O.C. WITH PREFORMED JOINT FILLER.
2. PROVIDE TOOLED CONTROL JOINTS AT 6' O.C.
3. PROVIDE BROOM FINISH IN DIRECTION PERPENDICULAR TO CURB.

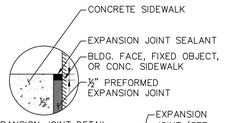

EXPANSION JOINT DETAIL

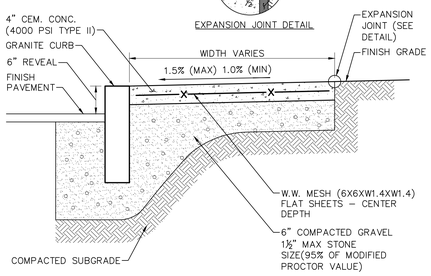

CONCRETE SIDEWALK
N.T.S.

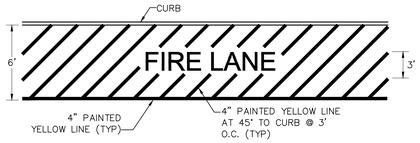

NOTE:
1. THE WORDS "FIRE LANE" SHALL BE MARKED ON THE PAVEMENT IN 3' HIGH LETTERS WITH 4" PAINTED YELLOW LINES.

FIRE LANE PAVEMENT MARKING
N.T.S.

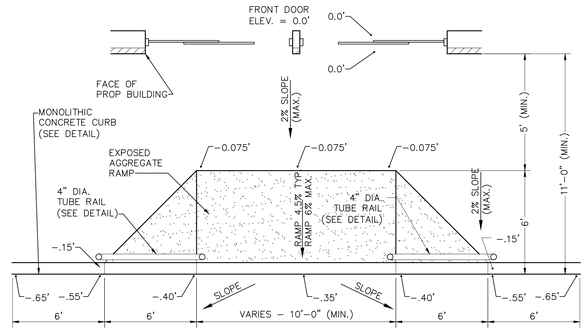

LARGE RETAIL FRONT DOOR RAMPS
W/ WING RAMPS – N.T.S.

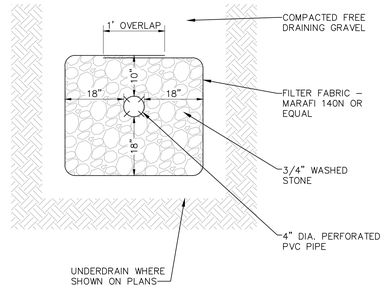

UNDERDRAIN DETAIL
N.T.S.

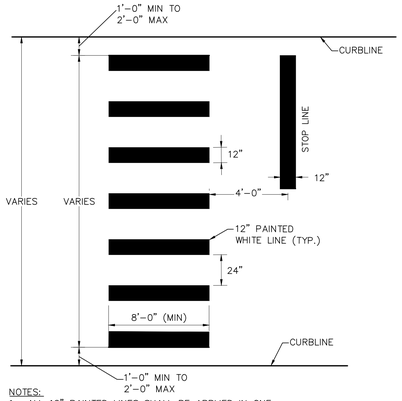

NOTES:
1. ALL 12" PAINTED LINES SHALL BE APPLIED IN ONE APPLICATION, NO COMBINATION OF LINES (TWO – 6" LINES) WILL BE ACCEPTED.
2. LAYOUT OF CROSSWALKS SHALL BE APPROVED THE ENGINEER PRIOR TO APPLICATION OF PAINT.
3. ALL CROSSWALKS INSTALLED SHALL CONFORM TO THE RELEVANT PROVISIONS OF THE MASSACHUSETTS HIGHWAY DEPARTMENT "STANDARD SPECIFICATION FOR HIGHWAY AND BRIDGES" DATED 1988.
4. THE PAVEMENT MARKINGS FOR CROSSWALKS WITHIN THE PUBLIC WAY MAY VARY AND SHALL BE APPROVED BY THE CITY ENGINEER PRIOR TO THE APPLICATION OF PAINT.

CROSSWALK PAVEMENT MARKING
N.T.S.

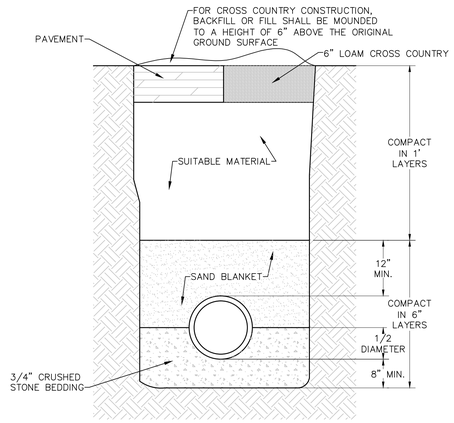

NOTE:
1. W = MAXIMUM ALLOWABLE TRENCH WIDTH TO A PLANE 12" ABOVE THE PIPE FOR PIPES 15" NOMINAL DIAMETER OR LESS. W SHALL ALSO BE 24" PLUS PIPE DIAMETER

UTILITY TRENCH SECTION – EARTH CONSTRUCTION
N.T.S.

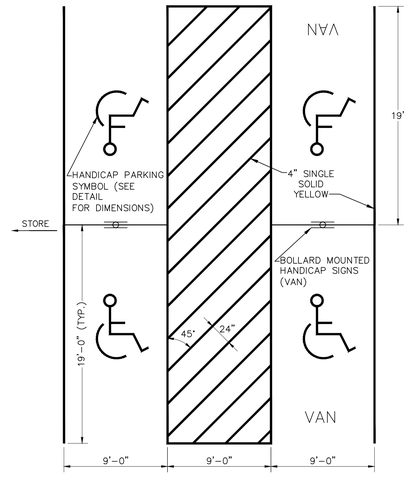

HANDICAP PARKING STALL STRIPING DETAIL
N.T.S.

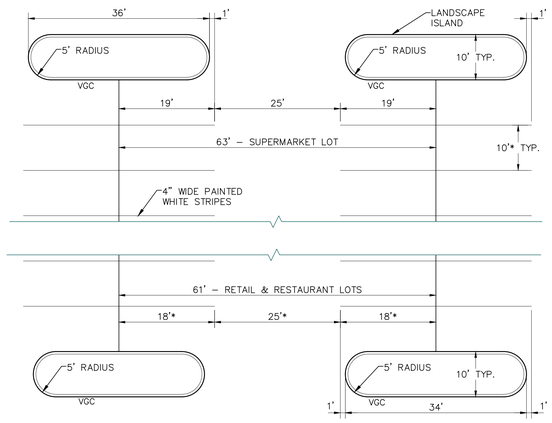

LOT 2 PARKING LOT STRIPING AND END ISLAND DETAIL
N.T.S.

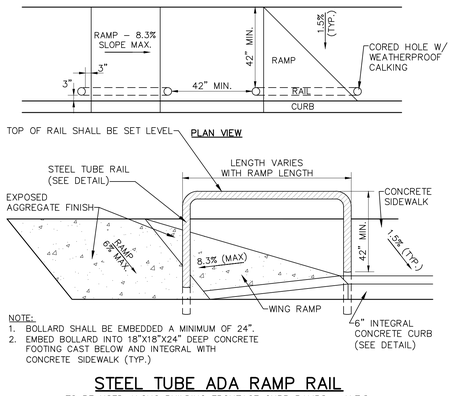

NOTE:
1. BOLLARD SHALL BE EMBEDDED A MINIMUM OF 24".
2. EMBED BOLLARD INTO 18"X18"X24" DEEP CONCRETE FOOTING CAST BELOW AND INTEGRAL WITH CONCRETE SIDEWALK (TYP.)

STEEL TUBE ADA RAMP RAIL
TO BE USED ALONG BUILDING FRONTAGE CURB RAMPS – N.T.S.

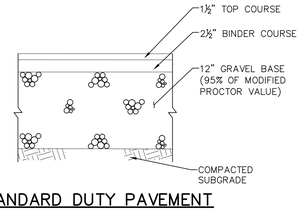

STANDARD DUTY PAVEMENT
N.T.S.

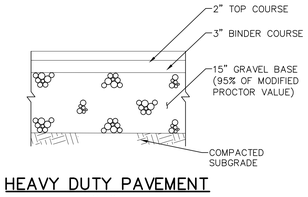

HEAVY DUTY PAVEMENT
N.T.S.

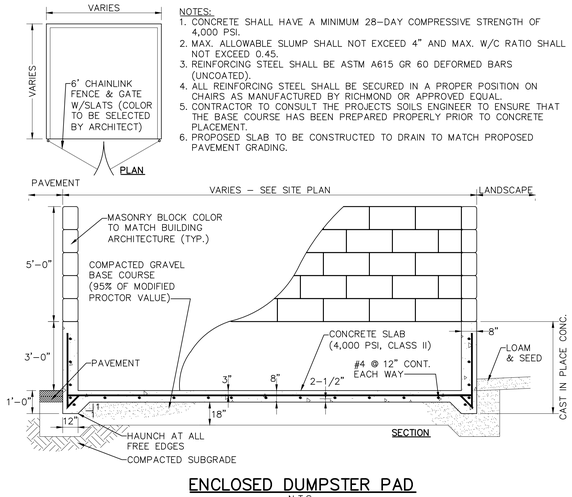

NOTES:
1. CONCRETE SHALL HAVE A MINIMUM 28–DAY COMPRESSIVE STRENGTH OF 4,000 PSI.
2. MAX. ALLOWABLE SLUMP SHALL NOT EXCEED 4" AND MAX. W/C RATIO SHALL NOT EXCEED 0.45.
3. REINFORCING STEEL SHALL BE ASTM A615 GR 60 DEFORMED BARS (UNCOATED).
4. ALL REINFORCING STEEL SHALL BE SECURED IN A PROPER POSITION ON CHAIRS AS MANUFACTURED BY RICHMOND OR APPROVED EQUAL.
5. CONTRACTOR TO CONSULT THE PROJECTS SOILS ENGINEER TO ENSURE THAT THE BASE COURSE HAS BEEN PREPARED PROPERLY PRIOR TO CONCRETE PLACEMENT.
6. PROPOSED SLAB TO BE CONSTRUCTED TO DRAIN TO MATCH PROPOSED PAVEMENT GRADING.

ENCLOSED DUMPSTER PAD
N.T.S.

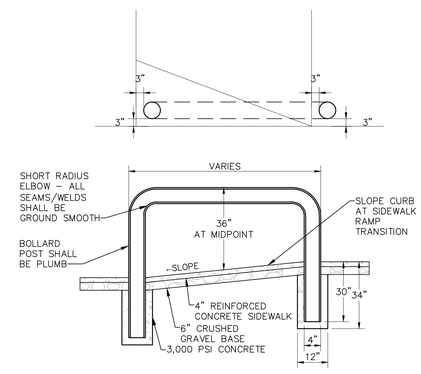

BOLLARD DETAIL – SIDEWALK RAMPS
N.T.S.

TEC, Inc.
65 Glenn Street
Lawrence, MA 01843
t: (978) 794-1792
169 Ocean Boulevard
Unit 101, PO Box 249
Hampton, NH 03842
t: (603) 601-8154
www.TheEngineeringCorp.com

DESIGNED BY	RJF
DRAWN BY	PFE
CHECKED BY	KRD
DATE	1/20/2015
SCALE	AS NOTED

PREPARED FOR
High Rock Cranberry Crescent, LLC
Suite 2–400
275 Grove Street
Newton, MA 02466

REVISIONS

ISSUED FOR
Construction

PROJECT TITLE
Cranberry Crescent Development

PROJECT LOCATION
Plymouth, Massachusetts

DRAWING TITLE
General Site Construction Details

COMMONWEALTH OF MASSACHUSETTS
RICHARD J. FRIBERG JR.
CIVIL
No. 47850
REGISTERED PROFESSIONAL ENGINEER
1/20/15

PROJECT NO. T0372
TEC CAD FILE T0372_DET.dwg
DRAWING NO. C–26
SHEET 26 OF 30

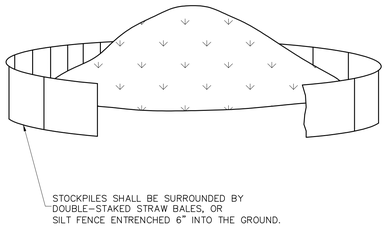

SOIL STOCKPILE

N.T.S.

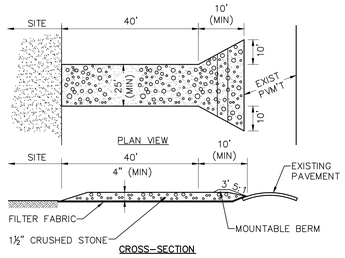

NOTES:
1. ENTRANCE WIDTH SHALL BE A TWENTY-FIVE (25) FOOT MINIMUM, BUT NOT LESS THAN THE FULL WIDTH AT POINTS WHERE INGRESS OR EGRESS OCCURS.
2. THE ENTRANCE SHALL BE MAINTAINED IN A CONDITION WHICH SHALL PREVENT TRACKING OR FLOWING OF SEDIMENT ONTO PUBLIC RIGHTS-OF-WAY. THIS MAY REQUIRE PERIODIC TOP DRESSING WITH ADDITIONAL STONE AS CONDITIONS DEMAND AND REPAIR OR CLEANOUT OF ANY MEASURES USED TO TRAP SEDIMENT. ALL SEDIMENT SPILLED, DROPPED, WASHED OR TRACKED ONTO PUBLIC RIGHTS-OF-WAY MUST BE REMOVED IMMEDIATELY. BERM SHALL BE PERMITTED. PERIODIC INSPECTION AND MAINTENANCE SHALL BE PROVIDED AS NEEDED.
3. STABILIZED CONSTRUCTION EXIT SHALL BE REMOVED PRIOR TO FINAL FINISH MATERIALS BEING INSTALLED.

STABILIZED CONSTRUCTION EXIT

N.T.S.

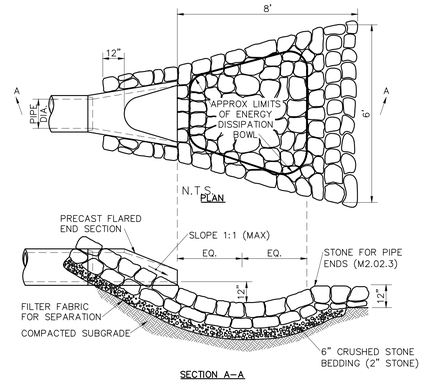

STONE PROTECTION AT FLARED END SECTION

N.T.S.

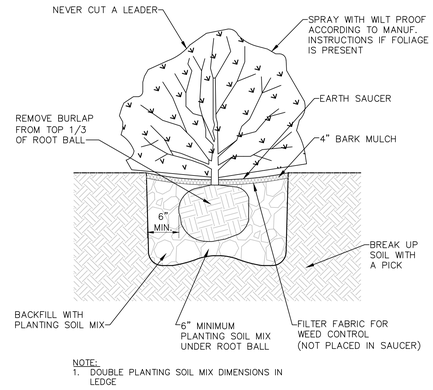

NOTE:
1. DOUBLE PLANTING SOIL MIX DIMENSIONS IN LEDGE

SHRUB PLANTING DETAIL

N.T.S.

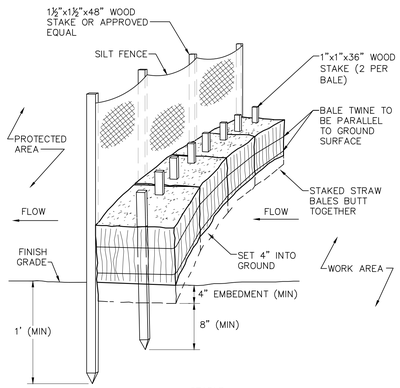

NOTES:
1. FILTER CLOTH SHALL BE FASTENED SECURELY TO POSTS WITH STAPLES. POSTS SHALL BE SPACED 8'-10' ON CENTER.
2. WHEN TWO SECTIONS OF FILTER CLOTH ADJOIN EACH OTHER THEY SHALL BE OVERLAPPED BY SIX INCHES AND FOLDED.
3. ENTRENCH SILT FENCE BUT NOT HAY BALES.
4. INSPECTIONS SHALL BE FREQUENT AND REPAIR OR REPLACEMENT SHALL BE MADE PROMPTLY AS NEEDED, OR WHEN SEDIMENT ACCUMULATES TO HALF THE HEIGHT OF FENCING.

EROSION CONTROL BARRIER

N.T.S.

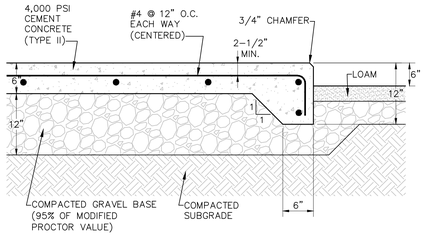

NOTES:
1. SIZE OF GENERATOR PAD TO BE AS INDICATED ON PLANS.
2. DETAIL PROVIDED FOR GENERAL INFORMATION ONLY. FINAL DESIGN TO BE BASED ON GEOTECHNICAL ENGINEERS RECOMMENDATIONS.
3. THE NEED FOR PLACEMENT OF A GEOTEXTILE OVER THE EXISTING FILL SUBGRADES SHOULD BE DETERMINED IN THE FIELD BY THE GEOTECHNICAL ENGINEER.
4. KNOCK OUTS FOR PENETRATIONS TO BE VERIFIED BY ELECTRICAL ENGINEER.
5. BOLLARDS TO BE PLACED AS NECESSARY TO PROTECT GENERATOR FROM TRUCK TRAFFIC.
6. THE PAD SHALL BE PROTECTED BY AN 8' TALL CHAIN LINK FENCE (BLACK) WITH BLACK SLATS

GENERATOR PAD

N.T.S.

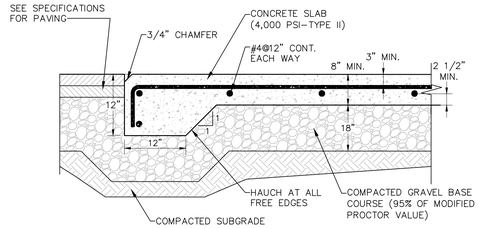

NOTES:
1. CONCRETE SHALL HAVE A MINIMUM 28-DAY COMPRESSIVE STRENGTH OF 4000 PSI.
2. MAXIMUM ALLOWABLE SLUMP SHALL NOT EXCEED 4" AND THE MAXIMUM W/C RATIO SHALL NOT EXCEED 0.45.
3. REINFORCING STEEL SHALL BE ASTM A615 GR 60 DEFORMED BARS (UNCOATED).
4. ALL REINFORCING STEEL SHALL BE SECURED IN A PROPER POSITION ON CHAIRS AS MANUFACTURED BY RICHMOND OR APPROVED EQUAL.
5. CONTRACTOR TO CONSULT THE PROJECTS SOILS ENGINEER TO ENSURE THAT THE BASE COURSE HAS BEEN PREPARED PROPERLY PRIOR TO CONCRETE PLACEMENT.
6. PROPOSED SLAB TO BE CONSTRUCTED TO MATCH PROPOSED DRAINAGE PATTERN IN PAVED AREA. ELECTRICAL PAD SHALL BE CONSTRUCTED 1.0' MIN ABOVE SURROUNDING GRASSED AREAS TO ALLOW DRAINAGE TO FLOW AROUND PAD.

COMPACTOR/DUMPSTER/LOADING PAD

N.T.S.

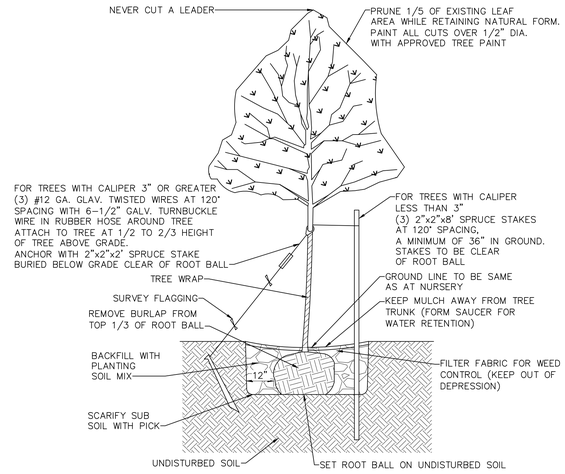

NOTE:
1. DOUBLE PLANTING SOIL MIX DIMENSIONS IN LEDGE

DECIDUOUS TREE PLANTING DETAIL

N.T.S.

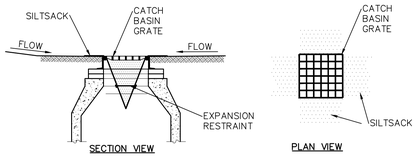

NOTES:
1. INSTALL SILTSACK IN EXISTING CATCH BASINS BEFORE COMMENCING WORK, AND IN NEW CATCH BASINS IMMEDIATELY AFTER INSTALLATION OF STRUCTURE. MAINTAIN UNTIL BINDER COURSE PAVING IS COMPLETE OR A PERMANENT STAND OF GRASS HAS BEEN ESTABLISHED.
2. GRATE TO BE PLACED OVER SILTSACK.
3. SILTSACK SHALL BE INSPECTED PERIODICALLY AND AFTER ALL STORM EVENTS AND CLEANING OR REPLACEMENT SHALL BE PERFORMED PROMPTLY AS NEEDED.

INLET PROTECTION – SILT SACK IN CATCH BASIN

N.T.S.

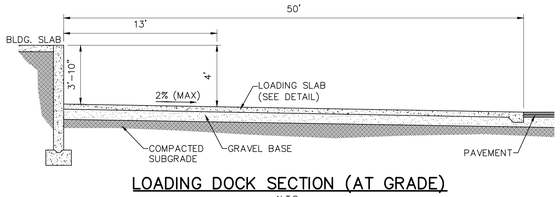

LOADING DOCK SECTION (AT GRADE)

N.T.S.

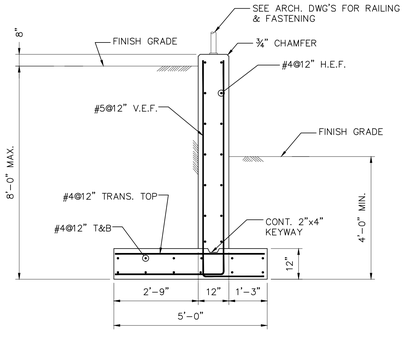

LOADING DOCK RETAINING WALL

N.T.S.

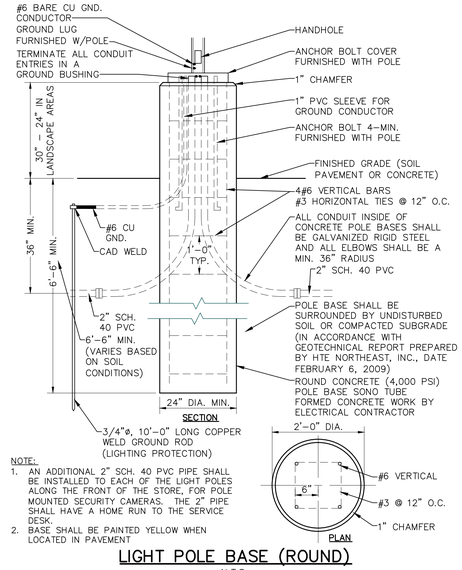

NOTE:
1. AN ADDITIONAL 2" SCH. 40 PVC PIPE SHALL BE INSTALLED TO EACH OF THE LIGHT POLES ALONG THE FRONT OF THE STORE, FOR POLE MOUNTED SECURITY CAMERAS. THE 2" PIPE SHALL HAVE A HOME RUN TO THE SERVICE DESK.
2. BASE SHALL BE PAINTED YELLOW WHEN LOCATED IN PAVEMENT

LIGHT POLE BASE (ROUND)

N.T.S.

TEC

TEC, Inc.

65 Glenn Street
Lawrence, MA 01843
t: (978) 794-1792

169 Ocean Boulevard
Unit 101, PO Box 249
Hampton, NH 03842
t: (603) 601-8154

www.TheEngineeringCorp.com

DESIGNED BY	RJF
DRAWN BY	PFE
CHECKED BY	KRD
DATE	1/20/2015
SCALE	AS NOTED

PREPARED FOR

High Rock Cranberry Crescent, LLC
Suite 2-400
275 Grove Street
Newton, MA 02466

REVISIONS

ISSUED FOR

Construction

PROJECT TITLE

Cranberry Crescent Development

PROJECT LOCATION

Plymouth, Massachusetts

DRAWING TITLE

General Site Construction Details

COMMONWEALTH OF MASSACHUSETTS
RICHARD FRIBERG JR.
CIVIL
No. 47850
REGISTERED PROFESSIONAL ENGINEER
1/20/15

PROJECT NO. T0372

TEC CAD FILE T0372_DET.dwg

DRAWING NO. C-27

SHEET 27 OF 30

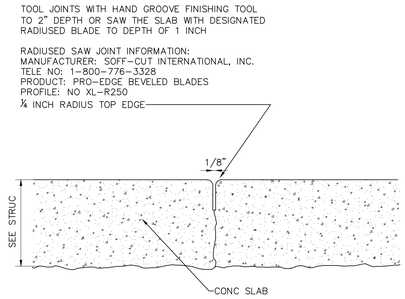

CONTROL JOINT @ CROSSWALK
N.T.S

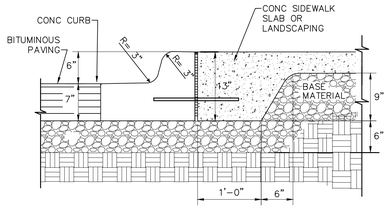

B612 CURB
N.T.S.

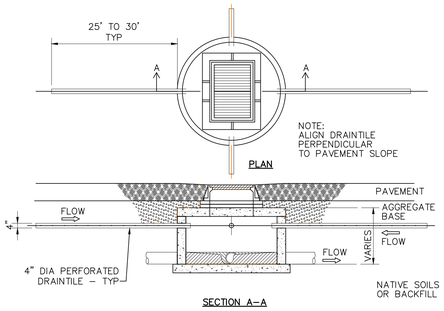

FINGER DRAIN DETAIL
N.T.S.

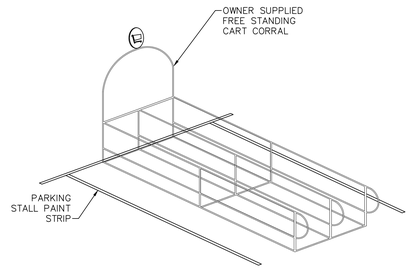

CART CORRAL-OWNER FURNISHED & INSTALLED
N.T.S.

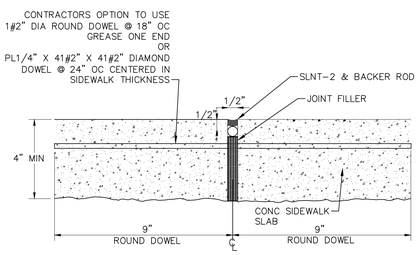

SIDEWALK EXPANSION JOINT
N.T.S.

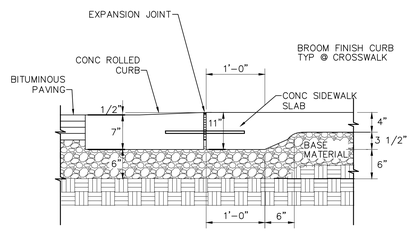

FLUSH CURB & WALK
N.T.S.

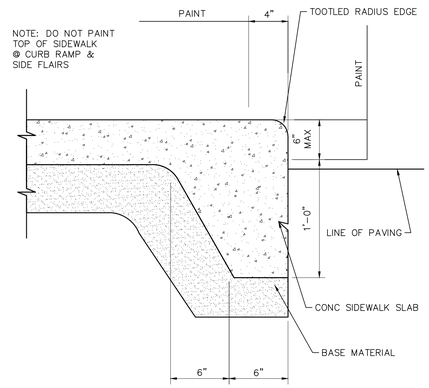

INTEGRAL CURB & WALK
N.T.S.

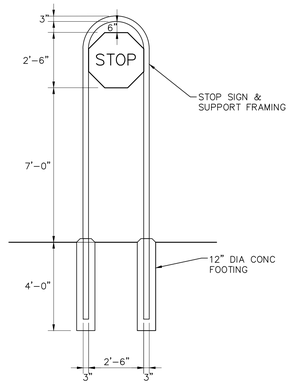

STOP SIGN
N.T.S.

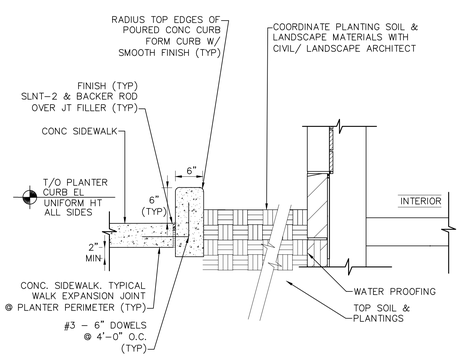

CONCRETE PLANTER CURB
N.T.S.

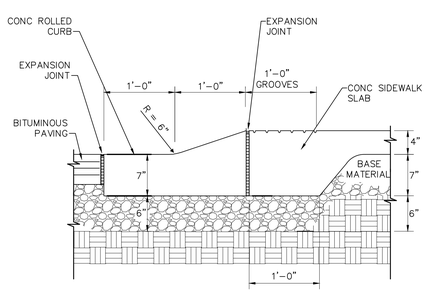

ROLLED CURB & WALK
N.T.S.

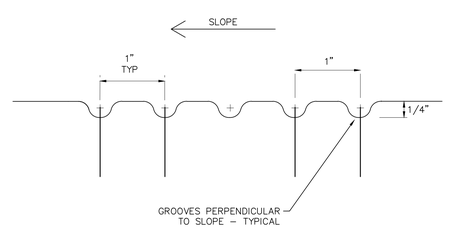

GROOVING DETAIL @ SIDEWALK
N.T.S.

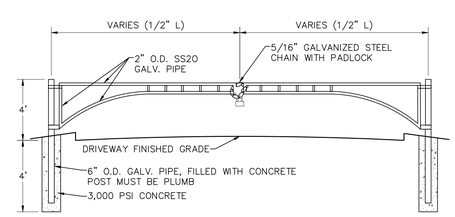

NOTE:
1. ALL RAILS AND HARDWARE TO BE BLACK VINYL COATED GALVANIZED STEEL.

BARRIER GATE
N.T.S.

TEC, Inc.

65 Glenn Street
Lawrence, MA 01843
t: (978) 794-1792

169 Ocean Boulevard
Unit 101, PO Box 249
Hampton, NH 03842
t: (603) 601-8154

www.TheEngineeringCorp.com

DESIGNED BY	RJF
DRAWN BY	PFE
CHECKED BY	KRD
DATE	1/20/2015
SCALE	AS NOTED

PREPARED FOR

High Rock Cranberry Crescent, LLC
Suite 2-400
275 Grove Street
Newton, MA 02466

REVISIONS

ISSUED FOR

Construction

PROJECT TITLE

Cranberry Crescent Development

PROJECT LOCATION

Plymouth, Massachusetts

DRAWING TITLE

General Site Construction Details

COMMONWEALTH OF MASSACHUSETTS
RICHARD J. FRIBERG JR.
CIVIL
No. 47850
REGISTERED PROFESSIONAL ENGINEER
1/20/15

PROJECT NO. T0372

TEC CAD FILE T0372_DET.dwg

DRAWING NO. C-28

SHEET 28 OF 30

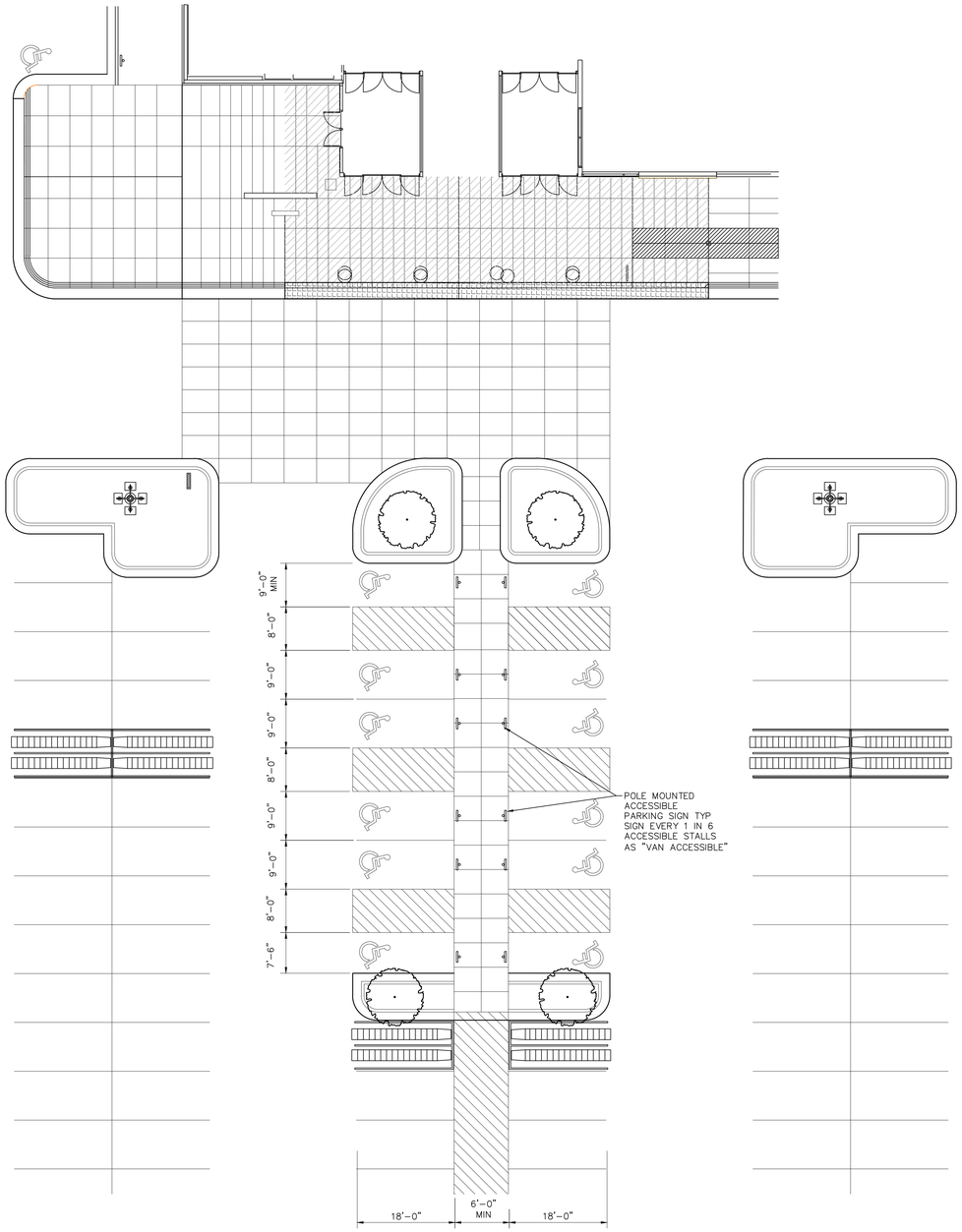

LOT 1 ACCESSIBLE PARKING AREA PLAN

N.T.S.

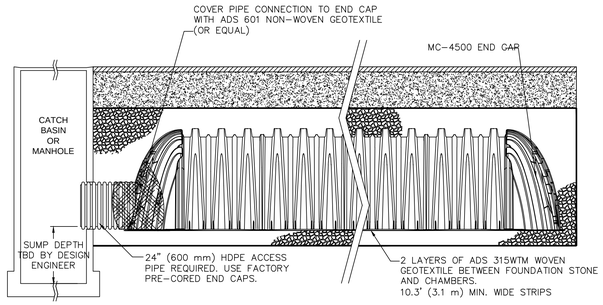

STORMTECH MC-4500 ISOLATOR ROW PROFILE

N.T.S.

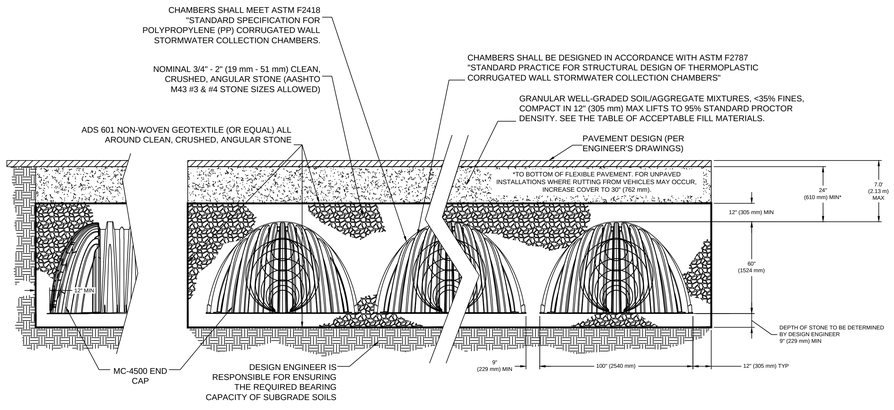

THE INSTALLED CHAMBER SYSTEM SHALL PROVIDE THE LOAD FACTORS SPECIFIED IN THE AASHTO LRFD BRIDGE DESIGN SPECIFICATIONS SECTION 12.12 FOR EARTH AND LIVE LOADS, WITH CONSIDERATION FOR IMPACT AND MULTIPLE VEHICLE PRESENCES.

STORMTECH MC-4500 TYPICAL SECTION

N.T.S.

TEC, Inc.

65 Glenn Street
Lawrence, MA 01843
t: (978) 794-1792

169 Ocean Boulevard
Unit 101, PO Box 249
Hampton, NH 03842
t: (603) 601-8154

www.TheEngineeringCorp.com

DESIGNED BY	RJF
DRAWN BY	PFE
CHECKED BY	KRD
DATE	1/20/2015
SCALE	AS NOTED

PREPARED FOR

High Rock Cranberry Crescent, LLC
Suite 2-400
275 Grove Street
Newton, MA 02466

REVISIONS

ISSUED FOR

Construction

PROJECT TITLE

Cranberry Crescent Development

PROJECT LOCATION

Plymouth, Massachusetts

DRAWING TITLE

General Site Construction Details

COMMONWEALTH OF MASSACHUSETTS
RICHARD J. FRIBERG JR.
CIVIL
No. 47830
REGISTERED PROFESSIONAL ENGINEER
1/20/15

PROJECT NO. T0372

TEC CAD FILE T0372_DET.dwg

DRAWING NO. C-29

SHEET 29 OF 30

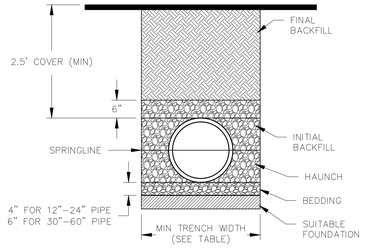

RECOMMENDED MINIMUM TRENCH WIDTHS

PIPE DIA	MIN TRENCH WIDTH
12"	30"
15"	34"
18"	39"
24"	48"
30"	56"
36"	64"
42"	72"
48"	80"
54"	88"
60"	96"

NOTES:

1. ALL PIPE SYSTEMS SHALL BE INSTALLED IN ACCORDANCE WITH ASTM D2321, "STANDARD PRACTICE FOR UNDERGROUND INSTALLATION OF THERMOPLASTIC PIPE FOR SEWERS AND OTHER GRAVITY FLOW APPLICATIONS", LATEST ADDITION.

2. FOUNDATION: WHERE THE TRENCH BOTTOM IS UNSTABLE, THE CONTRACTOR SHALL EXCAVATE TO A DEPTH REQUIRED BY THE ENGINEER AND REPLACE WITH SUITABLE MATERIAL AS SPECIFIED BY THE ENGINEER. AS AN ALTERNATIVE AND AT THE DISCRETION OF THE DESIGN ENGINEER, THE TRENCH BOTTOM MAY BE STABILIZED USING A GEOTEXTILE MATERIAL.

3. BEDDING: SUITABLE MATERIAL SHALL BE CLASS I, II OR III. MINIMUM BEDDING THICKNESS SHALL BE 4" (100mm) FOR 4"–24" (100mm–600mm); 6" (150mm) FOR 30"–60" (750mm–900mm).

4. INITIAL BACKFILL: SUITABLE MATERIAL SHALL BE CLASS I, II OR III IN THE PIPE ZONE EXTENDING NOT LESS THAN 6" ABOVE CROWN OF PIPE.

5. MINIMUM COVER: MINIMUM COVER SHALL BE 2.5' MEASURED FROM TOP OF PIPE TO TOP OF RIGID PAVEMENT, IN ACCORDANCE WITH TOWN OF PLYMOUTH STANDARDS.

DRAIN PIPE INSTALLATION

N.T.S.

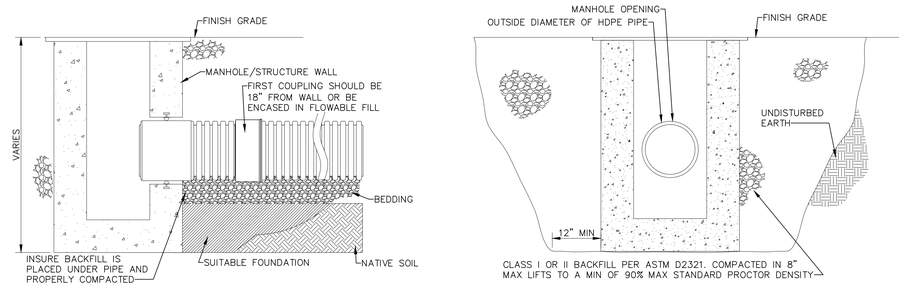

NOTES:

1. MAXIMUM INSERTION ANGLE SHALL NOT EXCEED REQUIREMENTS AS SPECIFIED BY THE MANUFACTURER.

2. SEE STANDARD DETAILS STD–202 (A–B) THROUGH STD–204 (A–E) FOR STRUCTURE CONNECTIONS, PRODUCT INFORMATION AND DIMENSIONAL PIPE DATA. INSTALLATION RECOMMENDATIONS ARE ALSO SPECIFIED IN TECHNICAL NOTE 5.04: HDPE CONNECTIONS TO MANHOLES AND STRUCTURES.

3. PERFORMANCE HIGHLY DEPENDENT ON INSTALLATION. CONTRACTOR MUST INSURE MANHOLE GASKET IS UNIFORMLY SEATED AROUND STRUCTURE ADAPTER. EXTRA PRECAUTIONS MUST BE TAKEN TO PREVENT DIFFERENTIAL SETTLEMENT BETWEEN THE PIPE AND MANHOLE.

DRAIN PIPE CONNECTION

N.T.S.

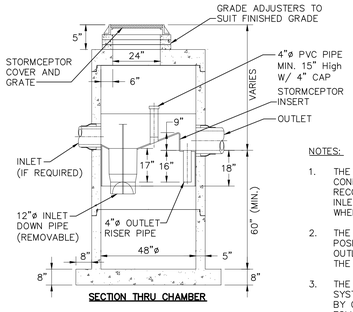

SECTION THRU CHAMBER

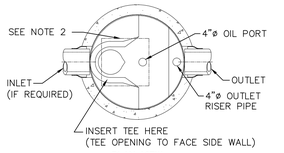

PLAN VIEW

NOTES:

1. THE USE OF FLEXIBLE CONNECTION IS RECOMMENDED AT THE INLET AND OUTLET WHERE APPLICABLE.

2. THE COVER SHOULD BE POSITIONED OVER THE OUTLET DROP PIPE AND THE OIL PORT.

3. THE STORMCEPTOR SYSTEM IS PROTECTED BY ONE OR MORE OF THE FOLLOWING U.S. PATENTS: #4985148, #5498331, #5725760, #5753115, #5849181, #6068765, #6371690.

4. CONTACT A CONCRETE PIPE DIVISION REPRESENTATIVE FOR FURTHER DETAILS NOT LISTED ON THE DRAWING.

SOURCE:
WWW.STORMCEPTOR.COM

STC 450i PRECAST CONCRETE INLET STORMCEPTOR® (450 U.S. GALLON CAPACITY)

N.T.S.

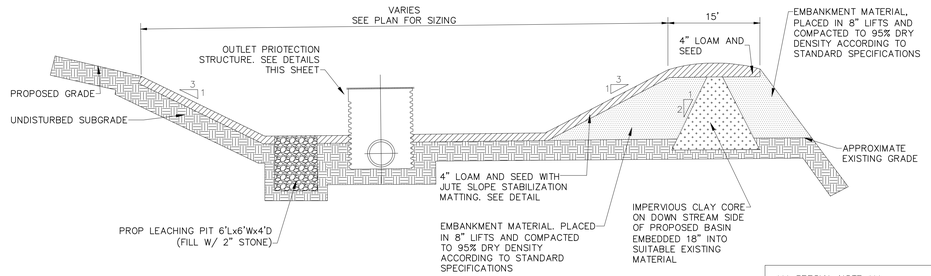

BERM MATERIALS (SEE SPECIAL NOTE BELOW)

1) IMPERVIOUS CORE (CLAY SILT & SAND SHALL CONFORM TO AASHTO T27 HAVING A COEFFICIENT OF PERMEABILITY OF 1 X 10 CM/SEC AND MEET THE GRADATION AS FOLLOWS:
ROLLED TO 6 LAYERS (95% COMPACTION)

PERCENT FINER	SIEVE SIZE
100	#4
30 TO 85	#40
20 TO 50	#200

2) FILTER LAYER F2
EMBANKMENT MATERIAL SHALL CONFORM TO AASHTO M57 AND MEET THE FOLLOWING GRADATION:

PERCENT FINER	SIEVE SIZE
100	3 IN.
95–100	2 IN.
55–85	1 IN.
27–52	#4
50 MAX	#40
25 MAX	#200

*** SPECIAL NOTE ***
SPECIAL MATERIALS 1, 2 AND ANTI–SEEP COLLARS CAN BE ELIMINATED AND REPLACED WITH GENERAL MATERIALS IN AREAS OF OVERALL EMBANKMENT CUT AND IN AREAS WHERE THE GEOTECHNICAL & CITY ENGINEERS DETERMINE THAT FIELD CONDITIONS DO NOT WARRANT THESE ITEMS.

TYPICAL INFILTRATION POND SECTION

N.T.S.

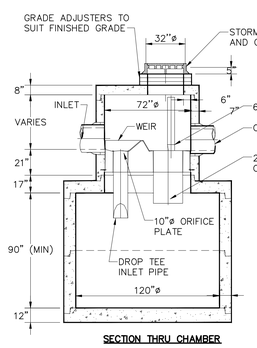

SECTION THRU CHAMBER

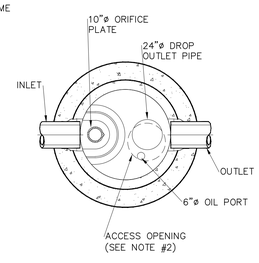

PLAN VIEW

NOTES:

1. THE USE OF FLEXIBLE CONNECTION IS RECOMMENDED AT THE INLET AND OUTLET WHERE APPLICABLE.

2. THE COVER SHOULD BE POSITIONED OVER THE OUTLET DROP PIPE AND THE OIL PORT.

3. THE STORMCEPTOR SYSTEM IS PROTECTED BY ONE OR MORE OF THE FOLLOWING U.S. PATENTS: #4985148, #5498331, #5725760, #5753115, #5849181, #6068765, #6371690.

4. CONTACT A CONCRETE PIPE DIVISION REPRESENTATIVE FOR FURTHER DETAILS NOT LISTED ON THIS DRAWING.

SOURCE:
WWW.STORMCEPTOR.COM

STC 4800 PRECAST CONCRETE STORMCEPTOR (4800 U.S. GALLON CAPACITY)

N.T.S.

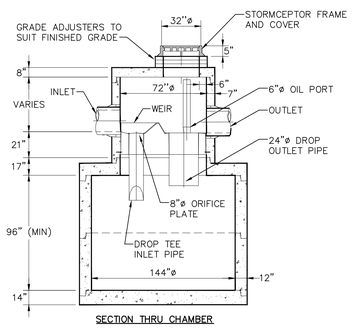

SECTION THRU CHAMBER

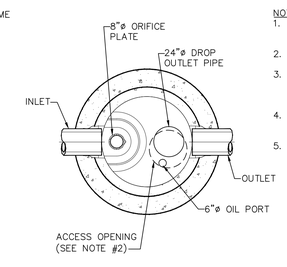

PLAN VIEW

NOTES:

1. THE USE OF FLEXIBLE CONNECTION IS RECOMMENDED AT THE INLET AND OUTLET WHERE APPLICABLE.
2. THE COVER SHOULD BE POSITIONED OVER THE OUTLET DROP PIPE AND THE OIL PORT.
3. THE STORMCEPTOR SYSTEM IS PROTECTED BY ONE OR MORE OF THE FOLLOWING U.S. PATENTS: # 4985148, #5498331, #5725760, #5753115, #5849181, #6068765, #6371690.
4. CONTACT A CONCRETE PIPE DIVISION REPRESENTATIVE FOR FURTHER DETAILS NOT LISTED ON THIS DRAWING.
5. A COMPARABLE PRODUCT MAY BE PROPOSED BY THE CONTRACTOR BUT ITS USE REQUIRES APPROVAL BY THE ENGINEER OF RECORD.

SOURCE:
WWW.STORMCEPTOR.COM

STC 7200 PRE–CAST CONCRETE STORMCEPTOR® (7200 U.S. GALLON CAPACITY)

N.T.S.

TEC

TEC, Inc.

65 Glenn Street
Lawrence, MA 01843
t: (978) 794-1792

169 Ocean Boulevard
Unit 101, PO Box 249
Hampton, NH 03842
t: (603) 601-8154

www.TheEngineeringCorp.com

DESIGNED BY	RJF
DRAWN BY	PFE
CHECKED BY	KRD
DATE	1/20/2015
SCALE	AS NOTED

PREPARED FOR

High Rock Cranberry Crescent, LLC
Suite 2–400
275 Grove Street
Newton, MA 02466

REVISIONS

ISSUED FOR

Construction

PROJECT TITLE

Cranberry Crescent Development

PROJECT LOCATION

Plymouth, Massachusetts

DRAWING TITLE

General Site Construction Details

COMMONWEALTH OF MASSACHUSETTS
RICHARD J. FRIBERG JR.
CIVIL
No. 47800
REGISTERED PROFESSIONAL ENGINEER
1/20/15

PROJECT NO. T0372

TEC CAD FILE T0372_DET.dwg

DRAWING NO. C–30

SHEET 30 OF 30